D. Melnicus 4/80

WELGER

Operating Manual · Spare Parts List

RP 180

from Mach. No. 1702.05.501

ROLL BALER

RP 180

from Mach. No. 1702.05501

Patents pending

GEBRÜDER WELGER
GMBH & CO. KOMMANDITGESELLSCHAFT

Address:	P. O. Box 1560, D-3340 Wolfenbüttel
Telephone:	Wolfenbüttel 5331 – 404-1
Telex:	956 18
Telegrams:	welger wolfenbüttel

The Machine Number of your baler is stamped into the model data plate shown in the adjoining illustration. As it is essential to quote this number in full in all your enquiries and spare parts orders, we recommend you to note it down in the space below:

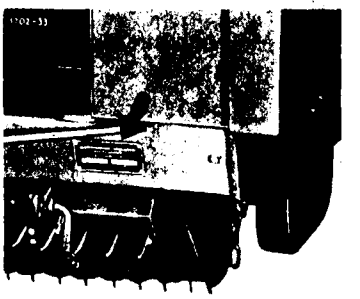

SAFETY INDICATIONS

The adjoining attention sign indicates important safety instructions in this operating manual. Please read the instructions carefully wherever you find this sign and use or operate the baler accordingly to avoid accidents. Please also inform your operating personnel.

Contents

GENERAL SAFETY INDICATION

Always stop baler first before doing repair or maintenance work to the machine.

Disengage PTO shaft before working on moving parts.

Always disconnect PTO shaft before driving on to roads and secure cross joint with chain to avoid slipping out of male shaft end.

Never remove hay or straw from running pick-up, disengage PTO first.

Only one operator is allowed on tractor.

Do not step on to baler frame when machine is running.

All guards must be fitted in place and be in good condition.

Do not stay in swinging reach of tailgate.

Fit tailgate supports before entering roll chamber.

Release oil pressure out of hydraulic system before starting maintenance work.

Close tailgate before stopping machine.

Release pre-pressure of roll chamber to zero when baler is not operated.

Block road wheels with two chocks when baler is parked. Always have two chocks on baler.

TECHNICAL DATA

Bale chamber size:	180 cm in diameter 150 cm in width
Bale weight:	Straw: 300 - 500 kg Hay: 500 - 800 kg
Bale density:	Variable over wide range, outer layers more firmly compacted than inner core.
Tying twine:	a) Sisal twine: 150 or 330 m/kg (300 to 495 ft/lb) runnage Consumption 800 - 500 g/t (1 3/4 - 1 lb/t twine in straw and 1 lb - 16 ozs/t twine in hay) b) Plastic (round baler) twines: 400 m/kg (600 ft/lb) runnage consumption 500 g/t 1 lb/t twine in straw and 11 ozs/t twine in hay)
Tying:	Optional hand tying by rope, or automatic tying by electrical motor, 8-12 turns per bale, depending on condition of material.
Pick-up working widths:	1800 mm
Pick-up lifting device:	Hydraulic, single acting cylinder
Tailgate operation:	Hydraulically, two double acting cylinders
Tyres	
Standard:	10,0/75 - 15 Impl. 6 PR
Extra:	11,5/80 - 15 Impl. 6PR
Required tractor power:	Depending up on density from 40 kW (55 PS)
PTO speed [1]:	540 r.p.m.
Tractor hydraulic:	One double acting and one single acting control valve with NW 10 push-in couplers.
Attachment to tractor:	Clevis hitch (home market) Swinging drawbar or three point linkage (Export)
Baler capacity:	10 - 20 round bales/hour
Dimensions of round baler:	
Length:	4950 mm (clevis hitch), 4850 mm (swinging drawbar)
Width:	2450 mm
Height:	2430 mm
Weight approx.:	1960 kg

1) Optional: Special gearbox for pto speed of 1000 r.p.m. is available.

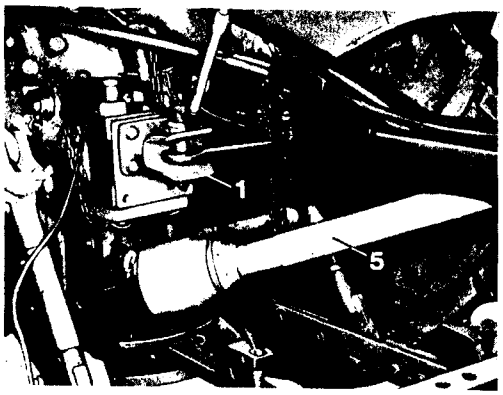

Fig. 1

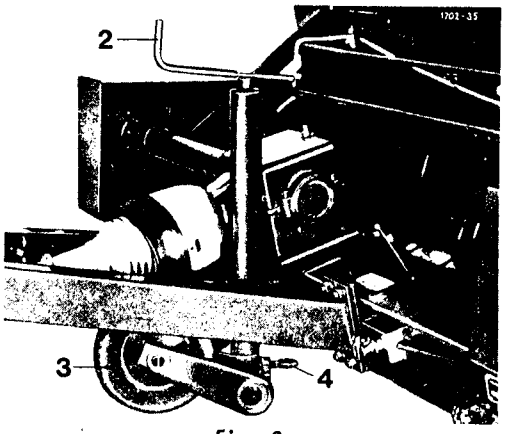

Fig. 2

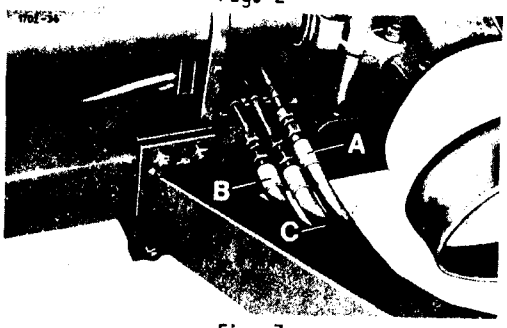

Fig. 3


Fig. 4

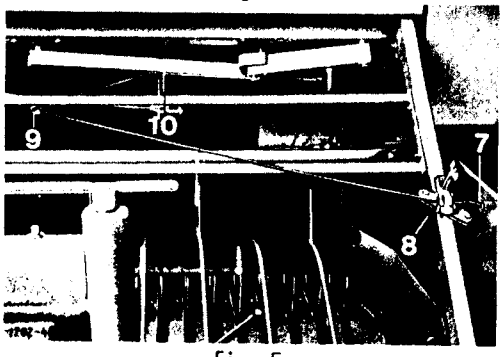

Fig. 5

PREPARING FOR OPERATION

Attaching the Baler

Attach machine to swinging drawbar 1 (fig. 1). Turn crank 2 (fig.2) on drawbar to align baler level with swinging drawbar, fit coupling bolt and secure. Raise drawbar jack 3 a little with crank 2. Step on foot rest 4 and swing up drawbar jack 3 until it engages at the top. As jack swings in, turn crank 2 to the stop to lock.

Fitting Wide Angle Drive Shaft

Clean PTO splines on tractor and baler. Fit wide angle PTO-shaft 5 (fig. 1) with shear pin clutch on implement side (wide angle joint on tractor side). Check tube length. Free telescoping length must not be less than 220 mm when driving straight ahead. Cut both profile tubes and guard tubes at even length, if necessary. Check adequate tube overlap. Fold PTO-shaft jack down. Secure protection tubes with chain against inadvertent turning.

Important Never turn wide angle joint at more than 70^0 while running or stationary.

Coupling of Hydraulic Lines

Tractor must be fitted with a single acting valve with (NW 10) connection to operate the pick-up (see line A in fig. 3) as well as a double acting control valve with two (NW 10) connections to operate the tailgate (see line B and C). Clean couplers on baler hoses and push them into the coupling sockets on the tractor.

Electrical Connections

1. Lighting system

Plug the cable for flashing indicator, brake and rear lights into the sockets on baler and tractor, then check that lights work properly.

2. Automatic Tying (Extra Equipment)

Plug cable with plug and switch from baler to tractor. Plug cable into Cigarette Lighter. Connect switch with magnet into handy position on tractor. See that connection cable is not entangled when negotiating curves.

Inserting Twine Spools

⚠ Insert and thread new twine spools during standstill of baler only!

Use baler twine of good quality, meeting the specifications given under "Technical Data" (see page 3). Where bales are to be stored outdoors, plastic twine is recommended. Place four spools upright, side by side (see fig. 4) into the twine box. Unless spools are inserted the right way round, the unreeling twine will tend to twist into loops and so may tear.

Pull twine end of spool D out of the wrapping to the top and tie it by simple knot to the start of spool E. Spools E and G are spares and may already be tied together in the same way and later to be moved over into the position of spools D and E.

Threading the Twine

Proceed as shown in figs. 4,5 and 6. Start twine from spool D through twine eyelet 7 - twine tensioner 8 twine eyelet 9 twine guide tube 10 - lock into cutting device 11 by lever 12. Only small tension is necessary on twine tensioner 8 (fig. 5).

Setting the Bale Counter

To keep correct count on ejected bales, counter 13 must be set to zero with key 14 (fig. 7). Therefore sideguard must be opened.

Before Road Transport

Move pick-up by tractor hydraulic into transport position: Swing lever 15 (fig. 8) on baler drawbar to the rear. Adjust tractor control valve to bring pick-up into the highest position. Leave lever 20 in rear locking position. The pick-up will now stay in transport position.

FIELD OPERATION

The roll baler is well guarded against possible accidents, even so it is important to operate the baler with care.

Check and keep all guards in place before starting to bale. Stop baler before adjustments and maintenance. Take great care when opening and closing tail gate. Nobody should stay in swinging reach of the tail gate. Use tail gate supports before entering roll chamber.

Windrowing

The machine works fast and smoothly at high output, if windrows are uniform and not too thick. Width should not exceed 1,50 m (5 ft.).

Pick-up Cover Shield (Extra Equipment)

Pick-up cover shield 16 (see fig. 8) prevents short stalk material from rolling away ahead of the pick-up. Take it off to handle medium and long stalk crops.
Fitting cover shield 16: Push pins into existing holes of pick-up side shields and secure with spring clips. Hook chains 17 into suitable position of rings 18 on sides of shield.

Pick-up Guide Wheel

To have optimum guidance of pick-up on uneven ground and garantee clean picking up of baling material, guide wheel 19 (fig. 9) is fitted. According to required pick-up clearance, guide wheel 19 can be mounted higher or lower. Normal setting is to have 2 cm ground clearance. (measurement K, fig. 10). Fix bolt 20 after adjustment of guide wheel 19 (fig. 9).

Setting Pick-up Height

Lifting and lowering is operated by tractor hydraulic. Move the pick-up from transport to working position after getting to the field: Swing lever 15 (fig. 8) on drawbar to front position. Lower pick-up control valve into working position. Avoid ground contact of tines, see measurement K in fig. 10. Position chain 21 (fig. 10) into hook 22 to avoid the pick-up from dropping into ditches. After baling pick-up is moved into transport position again (see page 4, before road transport).

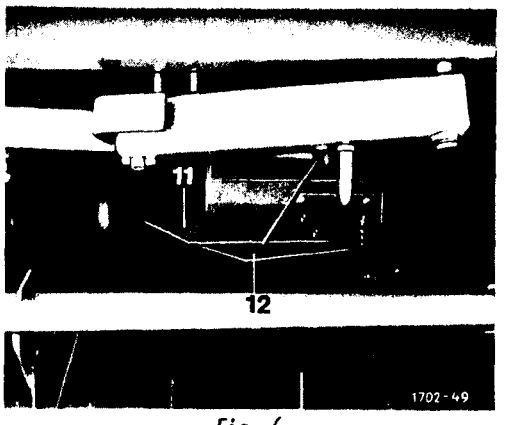

Fig. 6

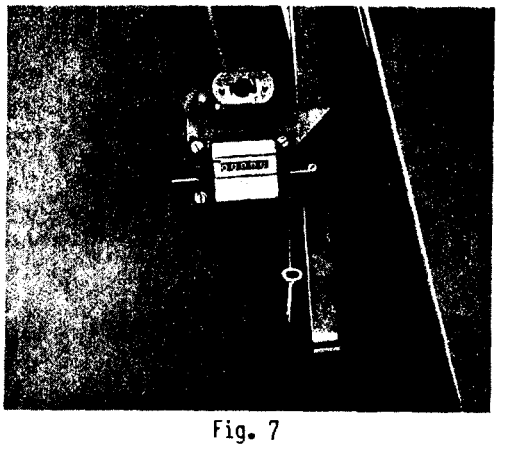
Fig. 7

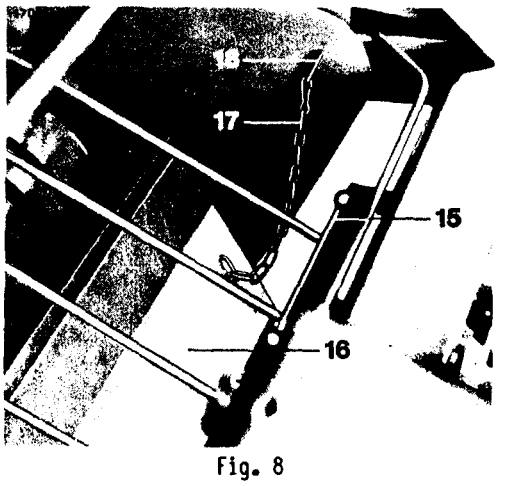

Fig. 8

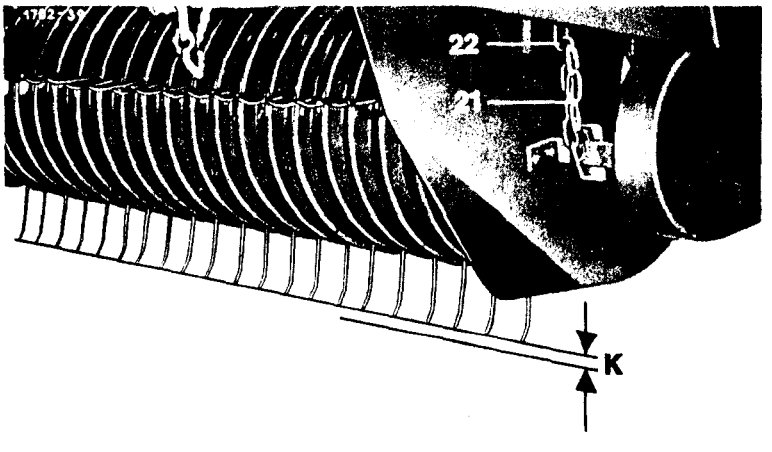

Fig. 10

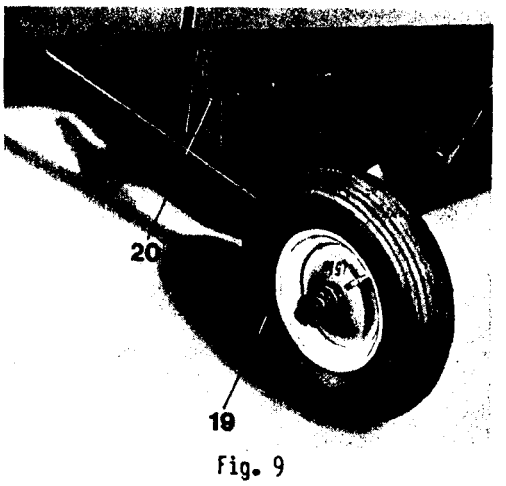

Fig. 9

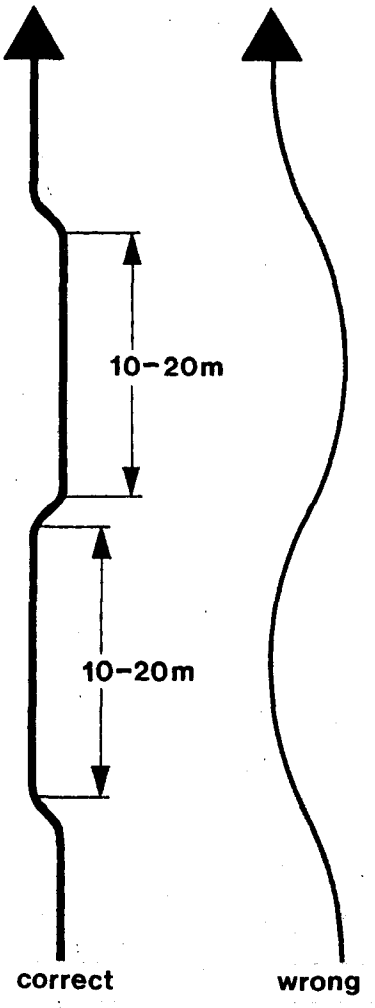

Fig. 11

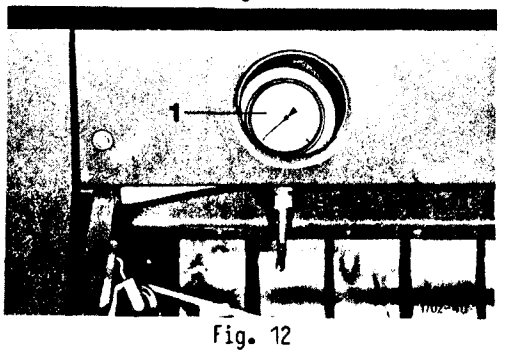

Fig. 12

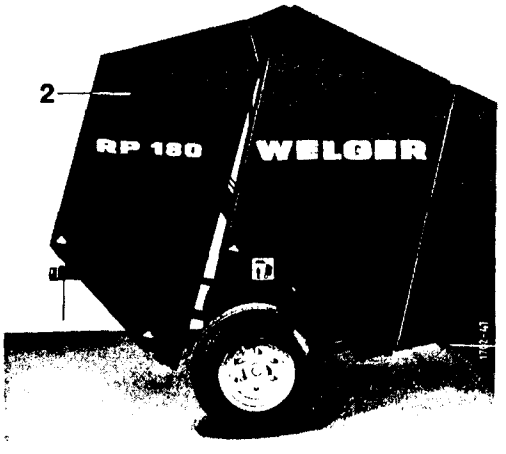

Fig. 13

PTO Speed

Drive the roll baler only through the standard 540 r.p.m. stage. The additional 1,080 r.p.m. can only be used in connection with special gear box (see page D 20). If very dry and short material is baled, the PTO speed can be cut down to about 350 - 450 r.p.m.

Negotiating Curves

Shut off PTO drive shaft when driving tight curves to avoid damage to drive parts.

Good Driving Practice

To obtain high outputs and well shaped round bales, the bale chamber should be evenly fed with material over the entire baler width. Good driving practice greatly contributes to steady, smooth feed. If windrows are narrower than pick-up width, drive alternatively along the right and left side of the windrow to ensure uniform chamber feeding (see fig. 11). You can check from tractor seat whether the chamber has evenly been packed just before the end of the baling cycle, and drive accordingly.

Hydraulic Control (Tailgate)

The baler is fitted with two hydraulic connections B and C (page 4, fig. 3) for tailgate operation. With the tractor control valve set to "lift", the tailgate opens, set to "lower" it closes.
Keep control lever to "lower" until gauge finger on gauge 1 (fig. 12) has reached the white section, prior to baling. The requested prepressure is then set correctly.
Set the valve to "neutral" while the bale is being rolled.
The pre-pressure so locks the tailgate by the built-in hydraulic valve system.Gauge 1 is then showing the oil pressure on the pulling side of the tailgate cylinders (pressure is usually dropping slightly in the "white" section at the beginning).

Bale Density

Bale density is variable over a wide range by feeding material into the chamber over a shorter or longer period. Compaction pressure is so building up inside of the bale chamber. Through both tailgate cylinders, the increasing pressure is transferred into the hydraulic system and is shown on gauge 1 (fig. 12).
The actual pressure in the bale chamber can be watched constantly on gauge 1.
Different range of pressure is needed for hay and straw. The green section on gauge 1 is the correct pressure range for baling hay. The yellow section on gauge 1 is the correct pressure range for baling straw.

Safety Arrangements

To prevent damage through inadvertent overload e.g. not observing the pressure gauge 1 (fig. 12), the hydraulic system has a safety device installed, so that the tailgate is gradually beginning to open if pressure rises to "red" section of the gauge. In this way the incoming material is leaving the baler again through slightly opened tailgate; pressure does not increase anymore.
Furthermore a shear pin clutch is installed in the PTO drive shaft. If shear bolt B cuts through overloading, the bolt must be replaced (see page D 10). Before starting the baler again for tying, the tailgate should be slightly opened by tractor hydraulic (see fig. 13).

Tying the Bale

When the bale has been compacted to the desired density, it is tied with twine. Therefore, the twine must correctly be threaded as explained on page 4. Tie the bale as follows:

1. Hand Tying Device

The hand tying mechanism is operated by rope from the tractor driver. Tie the bale as follows:

1.1. Slow down travelling speed, keep PTO speed up.

1.2. Pull tying rope 3 (fig. 14) from tractor seat until twine guide tube 4 is roughly centred above the chamber inlet.

1.3. This position is kept until the loose twine hanging out of twine guide tube 4 is seized by the last incoming hay to be carried into the bale chamber where it is taken around the bale. The wrapping procedure is now started.

1.4. Stop travelling, keep baler running stationary. Now pull rope 3 all the way to the stop and let the twine wrap about 2 - 3 times round the bale.

1.5. Let rope 3 slowly go back, so that the twine wraps itself in 6 - 10 helical turns around the bale (fig. 15).

1.6. Once guide tube 4 has moved close to tripping lever 5 (fig. 14) of cutting device, stop movement of rope 3 and let twine again wrap 2 - 3 times round the bale in one place.

1.7. Release rope 3. The twine is now cut off and wrapped round the bale. The other end is automatically held in the cutting device for the next tying.

2. Automatic Tying Mechanism (Extra Equipment)

The automatic tying mechanism is started by push-button control.

2.1. Slow down travelling speed, keep roll baler through pto running.

2.2. Press push-button on magnet switch (fastened to tractor).

2.3. Stop travelling speed as soon as twine is taken in by the roll bale, keep pto running. The tying procedure is now automatically operated until cutting.

2.4. Tying procedure can be stopped at any position by pressing "stop" button of magnet switch.

Change of Wrappings (Automatic Tying mechanism)

With knobs 7,8 and 9 (fig. 16) also wing nuts 10 and 11 (fig. 17) are the following adjustments made:

Knob 7: Turning clockwise wrappings on left hand side of bale are in increased (seen from front of baler).

Knob 8: Turning clockwise wrappings on right hand side are increased (seen from front of baler).

Knob 9: Turning clockwise is increased the distance of wrappings on the bale.

Wing nuts 10 (fig. 17): Turning clockwise is increasing the

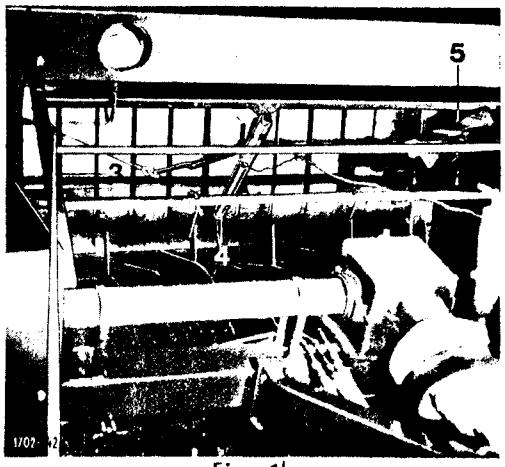

Fig. 14

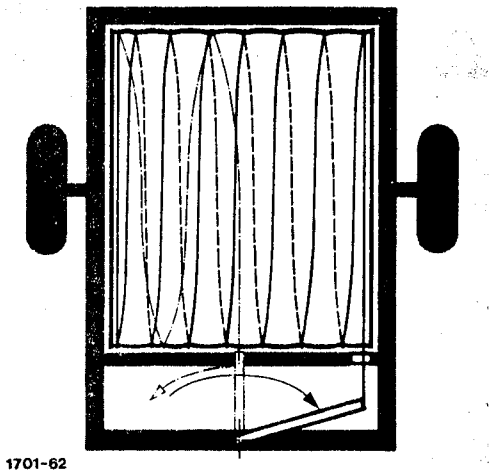

Fig. 15

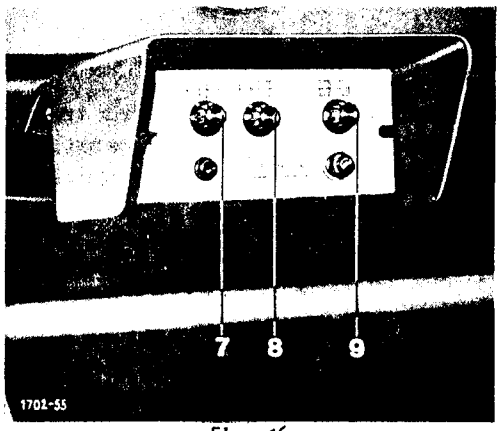

Fig. 16

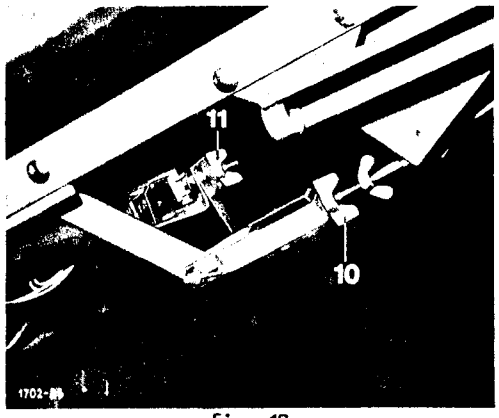

Fig. 17

Distance of wrappings from the left side of bale (seen from front). Wing nut 11: Turning clockwise is increasing the distance of wrappings from the right hand side of the bale (seen from the front).

Automatic tying mechanism can be changed to hand tying, if required. Therefore disconnect motor pulling rope (see page H 40 item No. 20) and fit parts for hand tying unit (see page H 10 item No. 10-16).

Bale Ejection

When the bale has been tied, switch off the PTO, open the tailgate with the tractor hydraulics and, at the same time, move back by about 5 m. When the tailgate is fully open, start up machine briefly, so that the bale will roll out. Before you close the tailgate with tractor valve again, advance a little way, so that the gate will not close on the deposited bale.

Attention: When working along rising ground, make sure to discharge the bale across the run of the slope. Nobody should stay in the swinging reach of tailgate.

BALE HAULAGE

Over short distances in field or yard, bales can be carried by front loader or the WELGER T 181 rear mounted fork. Over longer distances, haulage trailers should be used applying front loader for loading.

When travelling on public highways, local regulations must be considered.

Careful when using front loader of tractor for transportation or loading bales on slopes, rough ground or driving at sharp curves.

BALE STORAGE

It is advisable to use plastic round baler twine on bales which are stored outdoors. Special roll baler plastic twine is available from most of twine manufacturers: Bales should be stored with adequate distance because of rain drainage. Pyramidal storage of bales is not advisable. Straw bales can be packed in a row face to face. Main wind direction should be considered to avoid wind and sun shade. Place bales on to old tires, straw or similar. (Ground moisture).

Hay must be dry enough before baling and stored in a way that moisture evaporation is possible.
Bale stacks must be set at distance from buildings, public highways, electrical main lines etc.
Lock end bales of stack to avoid moving.

BALE DISTRIBUTION

Self-feeding from open racks or ruck trucks in stall or yard is the simplest method. Separating round straw bales for bedding requires no auxiliary equipment. Simply cut through the twine and you can then unroll the bale like a carpet. If restricted space makes this impossible, place the bale on end and separate the layers with the fork.

SERVICING THE BALER

Never carry out adjustments, repairs and servicing work on running machine. Stop tractor and wait for standstill of baler. Shut off PTO-drive or remove universal drive shaft before carrying out repairs on drive parts. Use tailgate supports before entering roll chamber. Be careful when opening and closing tailgate! Nobody should stay in the tailgate's swinging reach.

Look after your baler with care and always observe the specified servicing intervals to ensure cost-efficient operation over a long life, prevent premature repairs and maintain the baler's valve.

Tightening Bolts

After some 20 duty hours, firmly run down all nuts and bolts.

Checking Road Wheels

At regular intervals, check that wheel nuts are firmly run down and wheel caps sit tight. Check stub axle bolts. Check tyre pressure which should be 2.3 bar for the standard tyres 10.0/75-15 Impl. 6 PR, and 1.5 bar for pick-up guide wheel.

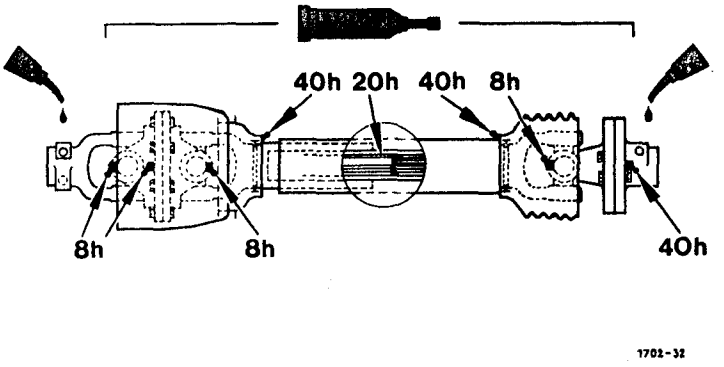

Fig. 18

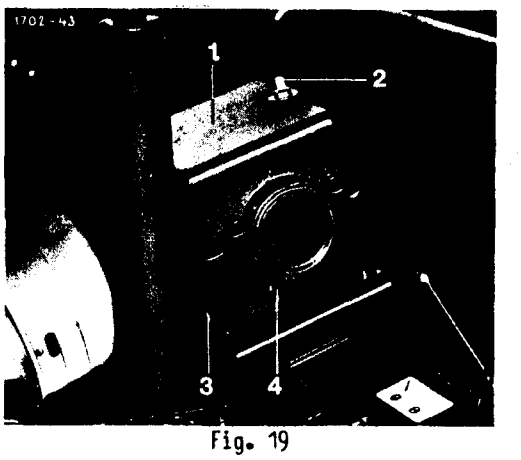

Fig. 19

PTO Shaft Lubrication

For lubrication of PTO shaft see fig. 18. Clean grease nipples first before greasing nipples at correct time intervals as mentioned in fig. 18 (h = hour). Keep PTO shaft clean at all times.

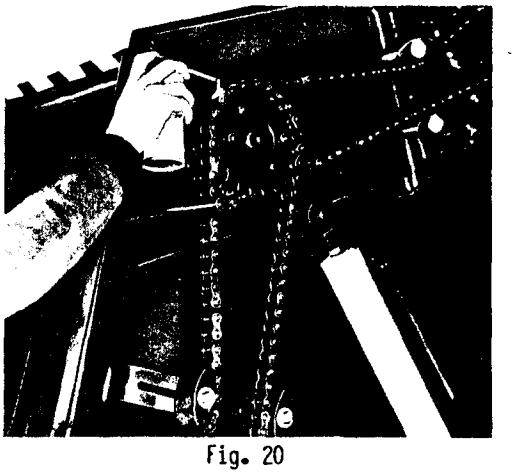

Fig. 20

Changing Gearbox Oil

After the first 20 duty hours approx. change the oil in gearbox 1 (fig. 16): Take off filling plug 2 with breather. Remove drain plug 3, drain out old oil into a container. Take out bolt 4 of oil level inspection hole. Clean and refit plug 3 tightly. Fill in 1 1/4 litres of gear oil SAE 90 until oil comes out of inspection hole. Re-fit bolt 4 into inspection hole. Check oil level regularily. Change oil after each season.

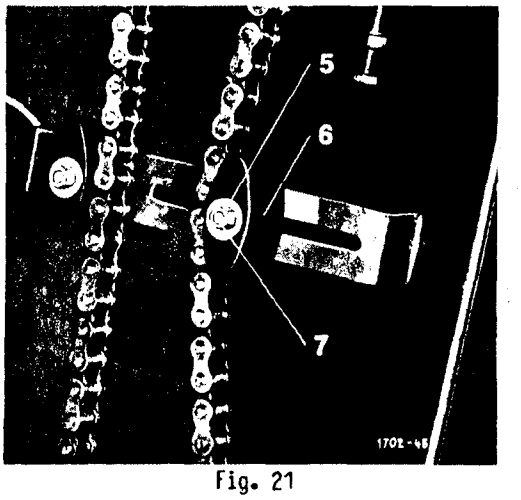

Fig. 21

Chain lubrication

Lubricate main drive chain and roller chains (5 pieces) regularily. Use chain spray lubricant. Open side guards. Use lubricant as shown in fig. 20. 0,5 kg chain lubricant is enclosed in twine box. Close guards after lubrication and secure.

Chain Tension

Tension of main drive and roller chains (5 pieces) must be checked regularily: Slacken safety nut 5 (fig. 21, this applies to all drive chains), re-tension block 6 with cuphead bolt 7 on loose strand of chain in slotted bracket. Tighten safety nut 5 again. Guide block on pulling strand of chain should have slide tension against chain, re-set if necessary.

Also check correct tension of pick-up drive chain regularily, re-tension if necessary (see arrow in fig. 22).

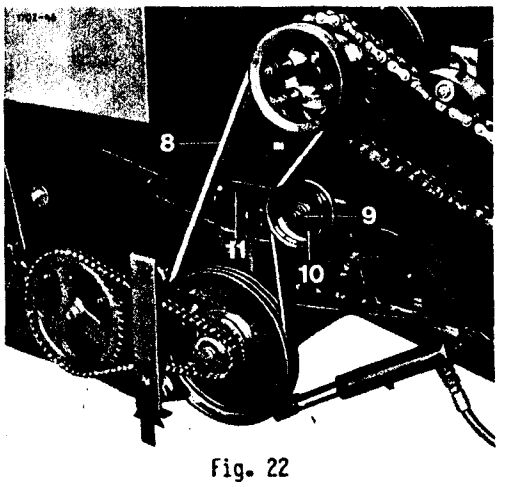

Fig. 22

Tensioning Pick-up V-belt

If the pick-up becomes overloaded, belts 8 (fig. 22) will slip. Normal stretch and wear reduce belt tension,until it slips too often and prevents smooth operation. When that happens, retension the belt 8 to fig. 22.

The belt is properly tensioned when it gives by no more than 5 mm when pressed down halfway between the pulleys. To adjust, slacken hexagon nut 9, set tension bolt 11, firmly run down nut 9 again.

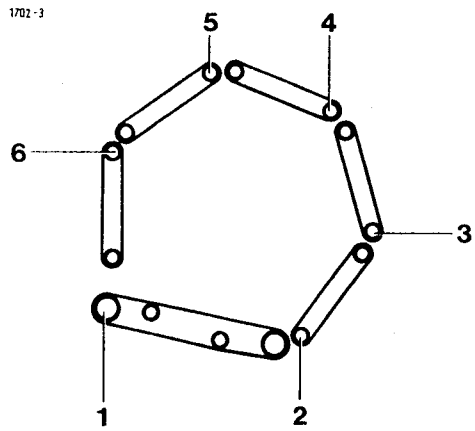

Fig. 23

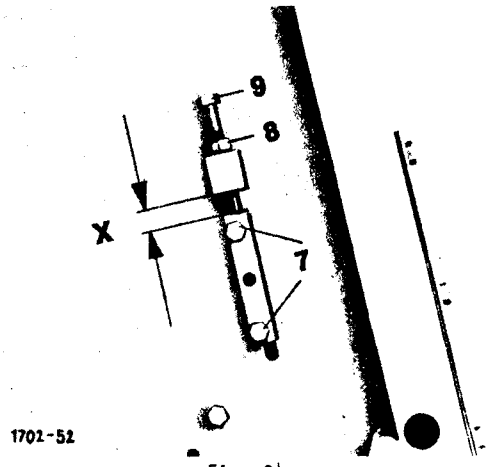

Fig. 24

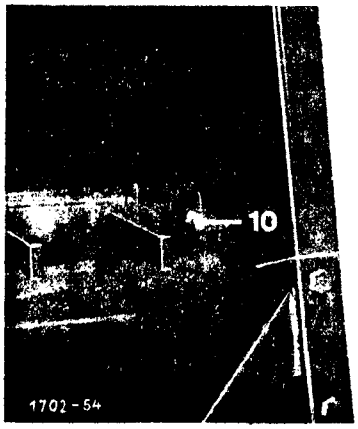

Fig. 25

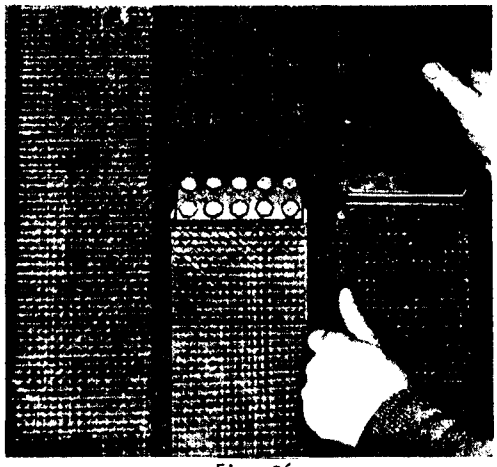

Fig. 26

Tensioning Flat Belts

Belts should be tensioned to give no more than 30 mm when pressed down halfway between the pulleys. (see reference inside of twine box).If they touch on inside, re-tension them with rollers 1-6 (fig. 23):

Open guards, slacken fixing bolts 7 of the roller bearings on both chamber sides (fig. 24).

Slacken locknuts 8 on both tension bolts 9, then run bolts uniformly back by a few turns until correct tension is restored. (see above).

Finally run locknuts 8 tightly down again. Tighten fixing bolt 7. Check dimension X in fig. 24 which must be the same on both sides. Close guards again.

NOTE: Do not tension belts beyond what has been said above. Otherwise belts will stretch easy. After re-setting, adjust scrapers accordingly.

Adjusting Scrapers

Each time flat belts have been tensioned, re-set scrapers to the rollers. Slacken 3 fixing bolts 10 at the sides (fig. 25) and shift scraper tine against the roller, leaving a clearance of 3 - 4 mm. Run bolts 10 down firmly again. Check clearance.

Fitting Flat Belts

To fit new belts, first slacken bolts 10 (fig. 25) and set scrapers well back. Turn out bolts 9 (fig. 24) on both sides until you can shift the tensioning rollers all the way back to the stop after slackening screws 7. Run down screws 7 lightly only, fit the belts over the rollers. Join belts as shown in fig. 26.

Fitting Belt Joiners

The belts are joined with special plate belt joiners. Position belts as shown in fig. 26 to fit bottom plate 11 to running side A of belt 12 (fig. 27). Press special countersunk bolt 13 through holes, mount top plate 14 on to carrying side B of belt 12. Fit special hexagon nut 15 with a tightening torque of 1,6 da Nm (kpm). Break off extra length of countersunk bolts 16. Adjust belt tension and scrapers as mentioned above.

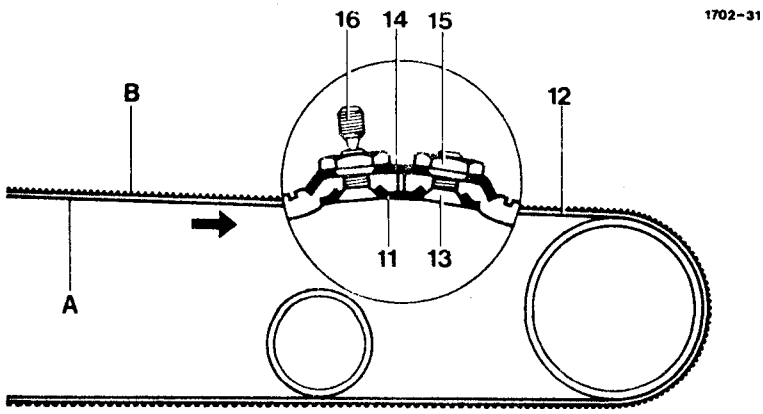

Fig. 27

Care of Flat Belts

No special maintenance is needed for correct belt tension, occasional check on belts joiners is recommended. Remove collected baling material from between belts.

Safety Arrangements

In the interest of your own safety and that of other traffic, keep flashing indicator and rear lights clean at all times and make sure that there are never obscured by overhanging material. Regularly check that all bulbs are alight. Always carry the 2 chocks supplied (stored in twine box).
If maintenance work is done when tailgate is opened, safety support 17 must be fitted between hydraulic cylinders. Open tailgate, remove spring clip 18 fit supports 17 between cylinders and secure with spring clip 18 (fig. 28).
After maintenance or repair work, supports 17 are replaced into storing place on cylinder and secured with spring clip 18.

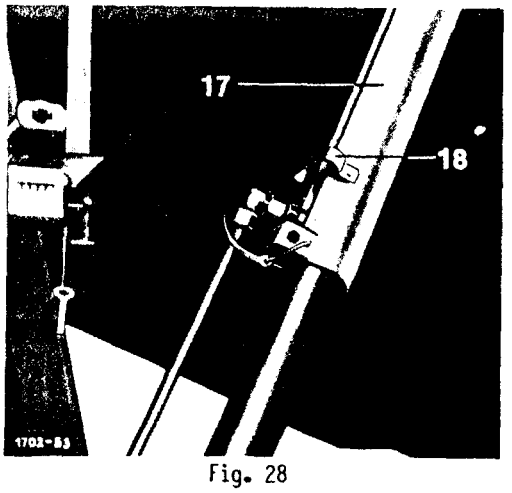

Fig. 28

Indication for Automatic Tying Device (Extra Equipment)

Fitting parts are supplied for mounting the holding bracket for the magnet switch with "start" and "stop" button to the tractor. Mount the holding bracket in a suitable position on the tractor for easy operation.

Operating Faults - Quick Remedy

Working conditions vary so widely that it is impossible to cover all causes which may lead to operating troubles. Soil properties, thickness of windows, condition of crop, inexperienced handling or negligent servicing of the machine may all be responsible. If the following chart does not help you to trace and eliminate a fault, call on the expert advice of our appointed representative, dealers and service engineers who are always at your disposal.

Disengage p.t.o.,stop tractor engine and wait untill all moving parts came to a standstill before maintenance work is done.

Never eliminate obstructions near the intake while the machine is running.

Nr.	Fault	Possible cause	Remedy	Remarks
1	Baling material is not picked up cleanly	Pick-up not low enough	Adjust pick-up height	see page 5 Adjusting pick-up
		Pick-up cover shield not used when baling short crop	Use cover shield when baling short crop	see page 5 Pick-up cover shield
		Insufficient pick-up guide on uneven ground	Correct setting of pick-up guide wheel	see page 5 Pick-up guide wheel
2	Pick-up is not lowering or lowering too slow	Pick-up valve block adjusted too high	Turn bolt on valve block outwards (locknut)	Build up pressure through 3 times lifting and lowering of pick-up before adjustment
3	Pressure on pick-up guide wheel to high	Pick-up valve block adjusted to low	Turn bolt on valve block inwards	
4	Baling material is clogging between pick-up and roll chamber	Travelling speed too high	Slow down until bale is started	

Nr.	Fault	Possible cause	Remedy	Remarks
5	Tailgate is opening and material is dropping out of bale chamber when gauge finger is in the white, green or yellow section	Tailgate was not closed with pre-pressure	Tailgate must be closed before picking up, gauge finger must be in the white section of pressure gauge	see page 6 Hydraulic control of tailgate
		Hydraulic system on tractor or baler is not operating correctly	Check hydraulic system. Re-adjust pre-pressure during baling several times	
6	Heavy belt wear	Baling material is collecting between flat belts	Remove baling material	see page 11 care of belts
		Belt tension too high	Adjust belt tension	see page 10 Belt adjustment
7	Uneven bale shape	Improper driving	Drive according to instructions	see page 6 Good driving practice
8	Loss of short material	On very dry material PTO speed too high	Cut PTO speed to about 350-450 r.p.m. Avoid unnecessary running of baler	see page 6 PTO speed
		Travelling speed too slow	Step up travelling speed	
		Windrows too small	Bigger size windrows	
9	Twine is slipping off bale	Uneven shape of bale	Driving according to instructions	see page 6 Good driving practice
		Incorrect tying at short material	Do not put twine wraps too close to ends of bale	see page 7 Tying the bale
10	Twine is not cut	Wrong adjustment on twine tensioner	Check tension on twine tensioner	see page 4 Threading twine
		Dull knife	Sharpen or replace knife	
11	Twine is running out of roll chamber	Slippery baling material, twine slips off	Let twine enter roll chamber before stopping baler travelling	see page 7 Tying of bale

Indication for Ordering Spare Parts

Parts illustrated on the following pages are marked with position numbers. The text below the illustration will tell you part number and description. Changed parts are marked with a stroke in front of the position number. To avoid any errors of delivery, the following details must be stated when parts are ordered:

Part-number and description of parts (stated in this list)
Quantity of parts required
Requested delivery (Post, freight express)
Full address of purchaser

Part numbers stated in this parts list are important, impressed numbers on parts are not binding. Belts, nuts spring washers and washers for complete unit parts are normally not supplied, if needed part numbers of fitting parts must be stated.

Abbreviation: 6kt = hexagon; kpl. = complete; at = interchangable; * = not illustrated

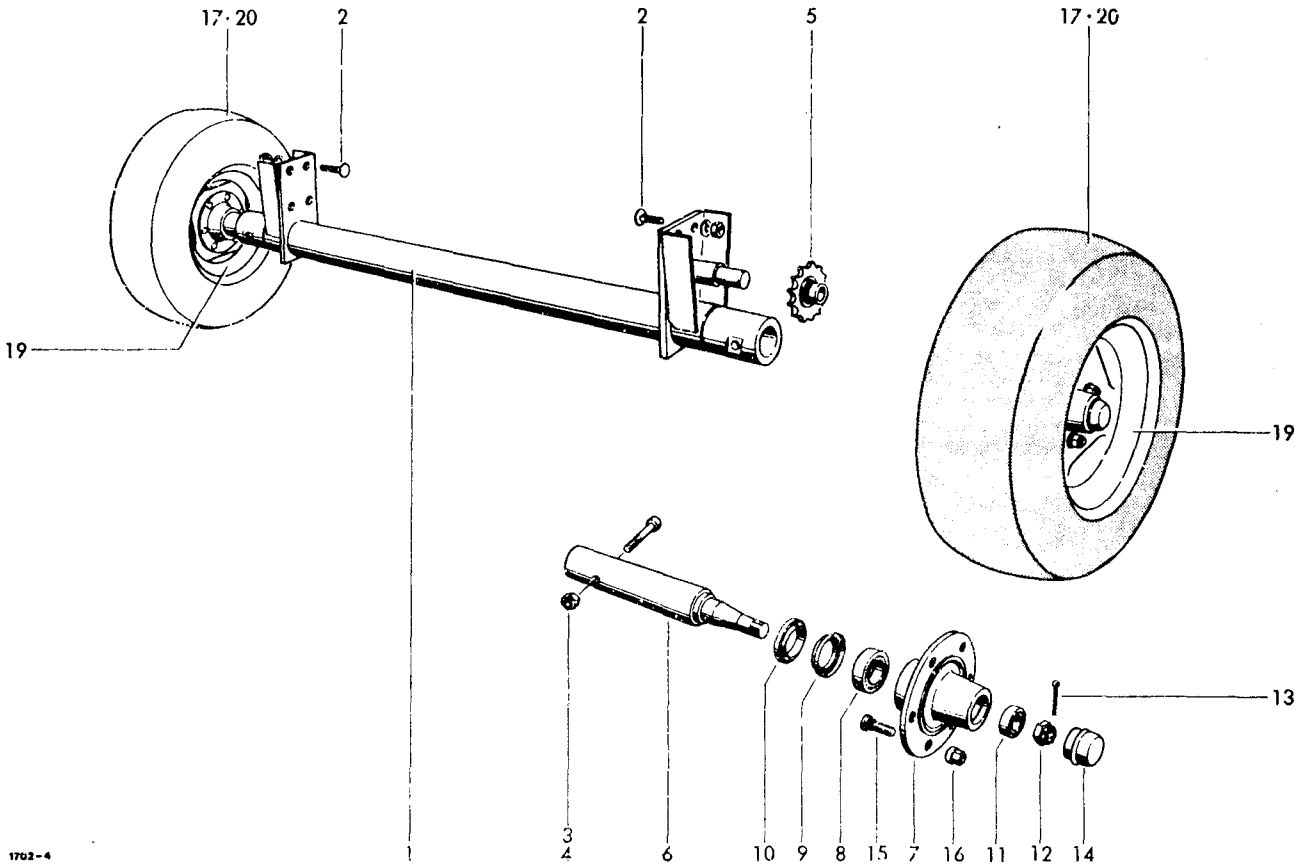

Key No.	Part-Number	Description	pc.
		Road Wheels	
1	1702.02.01.01	Axle	1
2	M12x40 DIN 603-8.8	Cup head bolt	8
	M12 DIN 934-8	Hex.nut	8
	A12 DIN 127	Spring washer	8
3	M16x90 DIN 912-8.8	Bolt	2
4	0320.74	Safety nut	2
5	1705.25.08.01	Tension sprocket	1
6-16	1115.02.01.57	Stub axle cpl.	2
6	1115.02.01.46	Stub axle	2
7	1115.02.01.59	Wheel hub	2
8	1115.02.01.48	Tapered roller bearing	2
9	1115.02.01.49	Seal	2
10	1115.02.01.50	Support ring	2
11	1115.02.01.51	Tapered roller bearing	2

Key No.	Part-Number	Description	pc.
12	M24x1.5 DIN 937	Castellated nut	2
13	5x45 DIN 94	Split pin	2
14	1115.02.01.66	Wheel cap	2
15	1115.02.01.55	Wheel stud	12
16	AM 18x1.5 DIN 74361	Wheel nut	12
17-19	115.02.03.05	Road wheel cpl. (standard)	2
19-21	1701.02.90.02	Road wheel cpl. (over size)	2
17	10.0/75-15 Impl. 6 PR	Tyre	2
18*	10-15	Tube	2
19	1115.02.03.08	Rim	2
20	11,5/80-15 Impl. 6 PR	Tyre	2
21	11.5/80-15 Impl.	Tube	2

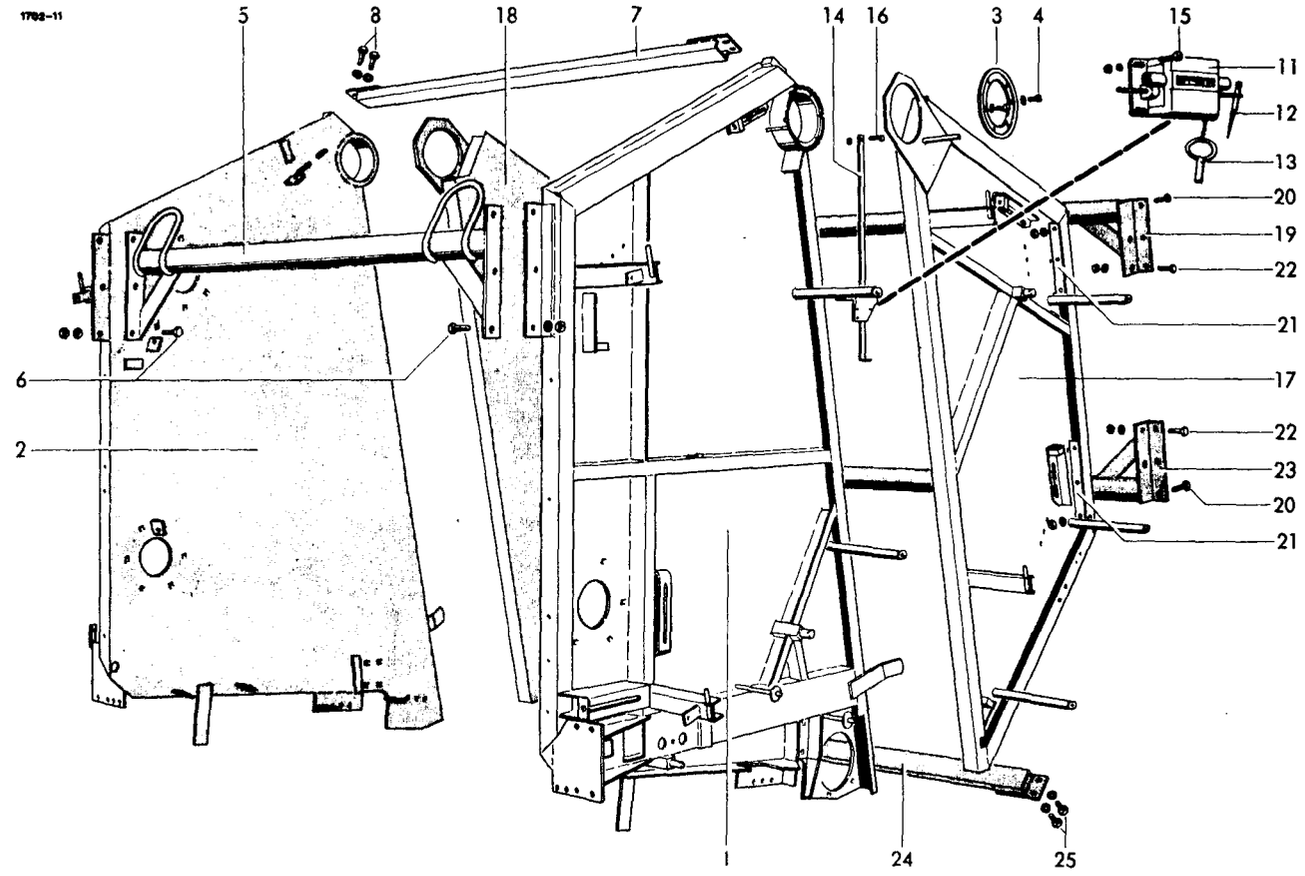

Key No.	Part-Number	Description	pc.
		Bale Chamber	
1	1702.03.01.02	Side panel	1
2	1702.03.02.02	Side panel	1
3	1701.03.03.01	Flange	2
4	M8x20 DIN 6912-8.8	Allen screw	4
	A8 DIN 127	Spring washer	4
5	1701.03.04.01	Cross tube	1
6	M12x30 DIN 933-8.8	Hex. bolt	2
	M12 DIN 934-8	Hex. nut	2
	A12 DIN 127	Spring washer	2
7	1701.03.04.12	Cross profile	1
8	M12x25 DIN 933-8.8		
	Verbus plus	Hex. bolt	4
	A12 DIN 127	Spring washer	4
11	1101.22.01.45	Bale counter cpl.	1
12	1101.22.01.59	Spring lever	1
13	1101.22.01.49	Key for Bale counter	1
14	1702.03.07.08	Rod	1
15	M4x10 DIN 84-48	Allen screw	3
	M4 DIN 934-8	Hex.nut	3
	A4 DIN 127	Spring washer	3

Key No.	Part-Number	Description	pc.
16	M10x25 DIN 933-8.8	Hex. bolt	1
	M10 DIN 934-8	Hex. nut	1
		Tail Gate	
17	1702.04.01.02	Side panel	1
18	1702.04.02.02	Side panel	1
19	1701.03.02.55	Cross tube	1
20	M12x30 DIN 933-8.8	Hex. bolt	12
	M12 DIN 934-8	Hex. nut	12
	A12 DIN 127	Spring washer	12
21	1701.03.02.69	Plate	4
22	M12x25 DIN 933-8.8	Hex. bolt	8
	M12 DIN 934-8	Hex. nut	8
	A12 DIN 127	Spring washer	8
23	1701.03.02.61	Cross tube	1
24	1701.03.04.12	Cross profile	1
25	M12x25 DIN 933-8.8		
	Verbus plus	Hex. bolt	4
	A12 DIN 127	Spring washer	4

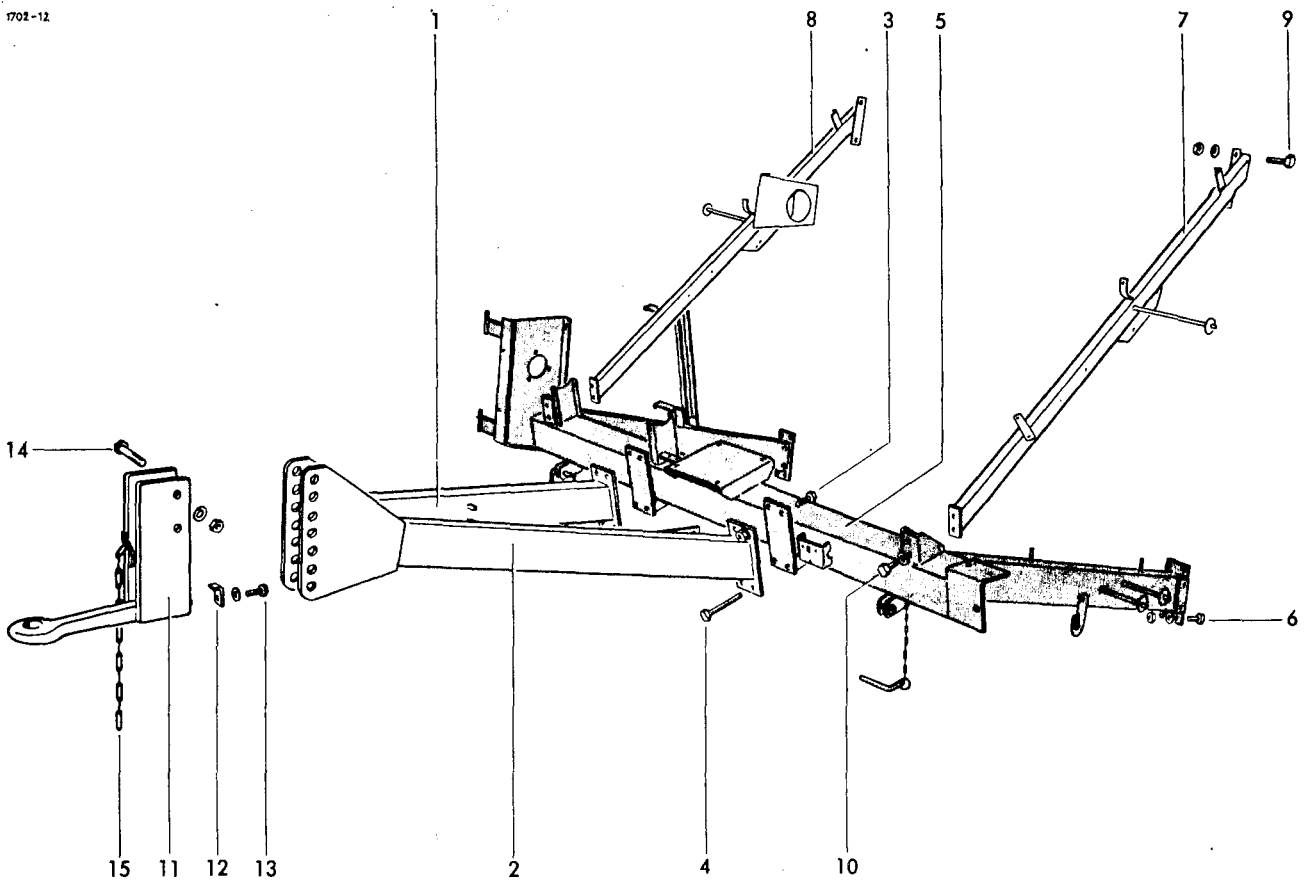

Key No.	Part-Number	Description	pc.
		Drawbar for clevis hitch (Inland)	
1	1702.08.01.01	Girder	1
2	1702.08.01.06	Girder	1
3	M16x45 DIN 933-8.8	Hex. bolt	4
	M16 DIN 934-8	Hex. nut	4
	A16 DIN 127	Spring	4
4	M16x170 DIN 931-8.8	Hex. bolt	4
	M16 DIN 934-8	Hex. nut	4
	A16 DIN 127	Spring washer	4
5	1702.05.02.01	Drawbar frame	1
6	M12x35 DIN 933-8.8	Hex. bolt	8
	M12 DIN 934-8	Hex. nut	8
	A12 DIN 127	Spring washer	8
7	1702.05.03.01	Support	1
8	1702.05.03.15	Support	1
9	M12x40 DIN 933-8.8	Hex. bolt	4
	M12 DIN 934-8	Hex. nut	4
	A12 DIN 127	Spring washer	4
10	M10x16 DIN 933-8.8	Hex. bolt	4
	A10 DIN 127	Spring washer	4
11	6408.21.01.12	Adjustable hitch cpl. with No. 12+13	1
12	6404.21.01.13	Rope catch	1
13	M12x20 DIN 933-8.8	Hex. bolt	1
	A12 DIN 127	Spring washer	1
14	M20x120 DIN 931-8.8	Hex. bolt	2
	M20 DIN 934-8	Hex. bolt	2
15	1705.42.08.01	Chain	1

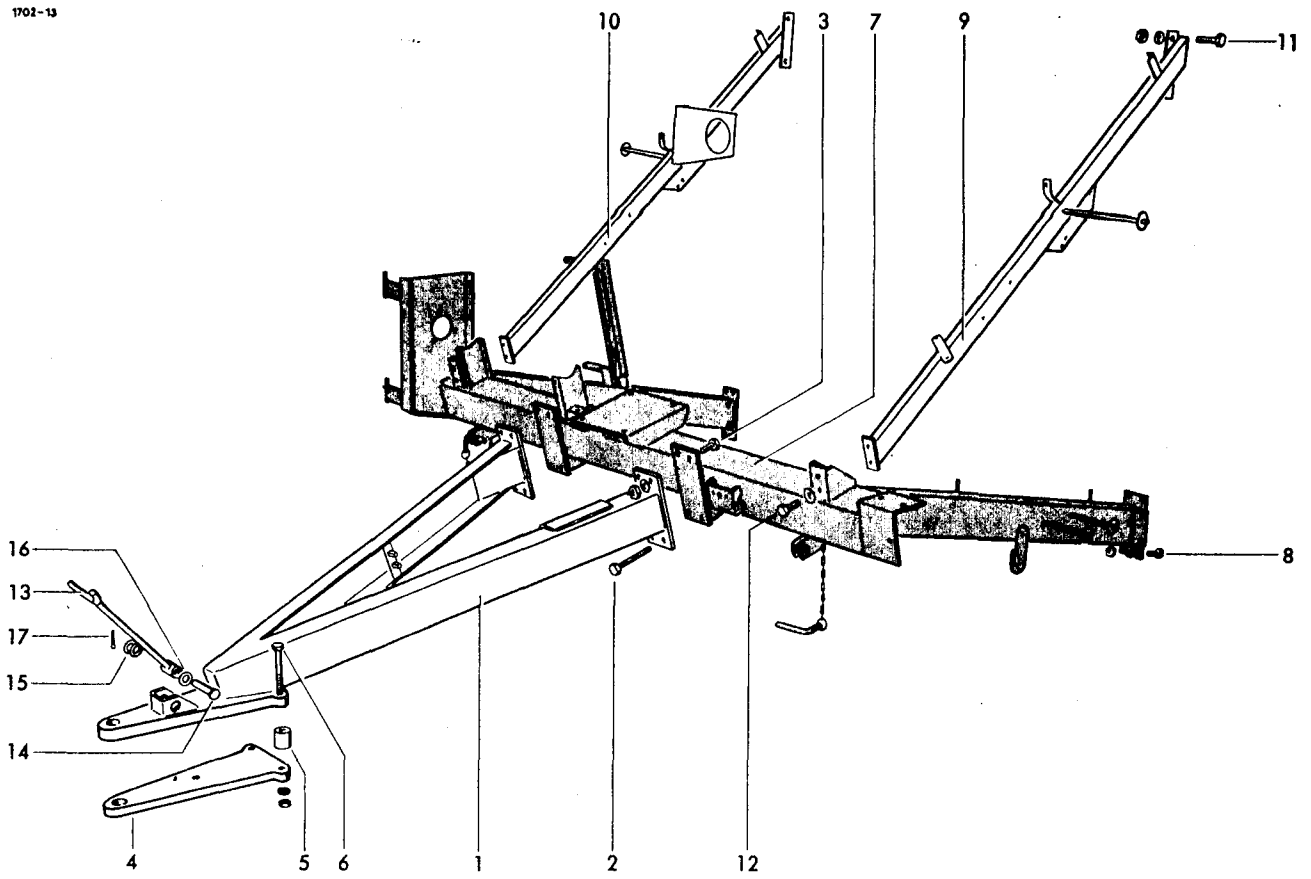

Key No.	Part-Number	Description	pc.
		Drawbar for swinging drawbar (low hitch)	
1	1702.05.01.01	Drawbar	1
2	M16x170 DIN 931-8.8	Hex. bolt	4
	M16 DIN 934-8	Hex. nut	4
	A16 DIN 127	Spring washer	4
3	M16x45 DIN 933-8.8	Hex. bolt	4
	M16 DIN 934-8	Hex. nut	4
	A16 DIN 127	Spring washer	4
4	1705.05.02.23	Plate	1
5	1705.05.02.24	Bush	3
6	M12x110 DIN 931-8.8	Hex. bolt	3
	M12 DIN 934-8	Hex. nut	3
	A12 DIN 127	Spring washer	3
7	1702.05.02.01	Drawbar frame	1
8	M12x35 DIN 933-8.8	Hex. bolt	8
	M12 DIN 934-8	Hex. nut	8
	A12 DIN 127	Spring washer	8

Key No.	Part-Number	Description	pc.
9	1702.05.03.01	Support	1
10	1702.05.03.15	Support	1
11	M12x40 DIN 933-8.8	Hex. bolt	4
	M12 DIN 934-8	Hex. nut	4
	A12 DIN 127	Spring washer	4
12	M10x16 DIN 933-8.8	Hex. bolt	4
	A10 DIN 127	Spring washer	4
13	1118.09.03.01	Support fork	1
14	16h11x80x75 DIN 1435	Pin	1
15	B16 DIN 137	Spring washer	2
16	17 DIN 125	Washer	1
17	4x25 DIN 94	Split pin	1

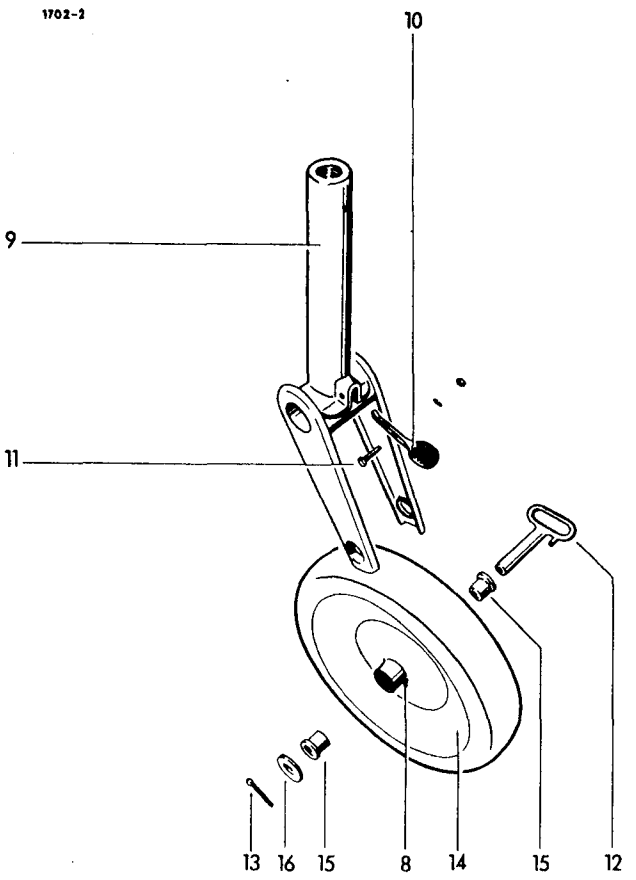

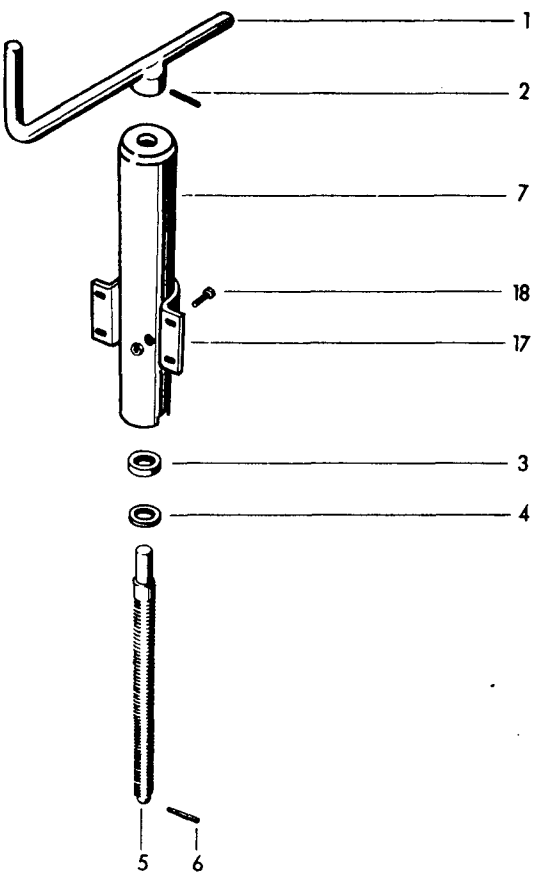

Key No.	Part-Number	Description	pc.
		Jack wheel support	
1–16	1705.06.01.01	Jack wheel cpl.	1
1	6405.03.01.02	Crank with bush	1
2	6x36 DIN 1461	Expanding pin	1
3	3203.01.12.37	Thrust bearing	1
4	6405.03.01.07	Bearing washer	1
5	6405.03.01.06	Spindle	1
6	4x32 DIN 1481	Expanding pin	1
7	1705.06.01.04	Outer tube	1
8	AM6 DIN 71412	Grease nipple	1
9	1705.06.01.05	Inner tube with fork	1
10	6405.03.01.08	Foot step	1

Key No.	Part-Number	Description	pc.
11	M8x35 DIN 933-8.8	Hex. bolt	1
	M8 DIN 934-8	Hex. nut	1
	A8 DIN 127	Spring washer	1
12	6405.03.01.09	Pin with handle	1
13	5x50 DIN 94	Split pin	1
14	6408.03.01.11	Steel wheel	1
15	6408.03.01.12	Bush	2
16	1705.06.01.14	Washer	1
17	0331.70	Clamp	1
18	M12x30 DIN 933-8.8	Hex. bolt	4
	M12 DIN 934-8	Hex. nut	4
	A12 DIN 127	Spring washer	4

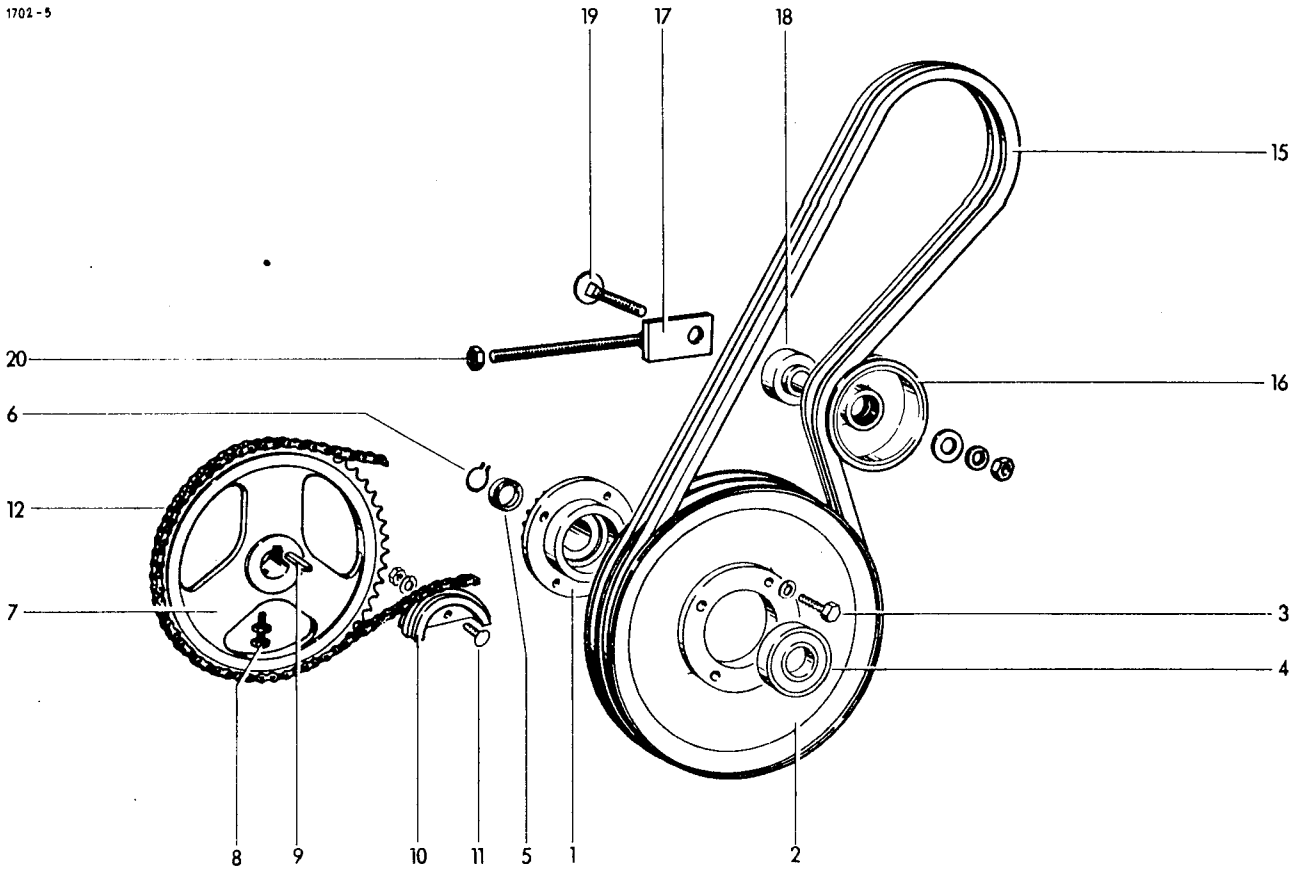

Key No.	Part-Number	Description	pc.
		Pick-up Drive	
1	1702.41.01.01	Hub	1
2	0703.15	V-belt pulley	1
3	M10x30 DIN 933-8.8	Hex. bolt	4
	A10 DIN 127	Spring washer	4
4	6007-2RS DIN 625	Ball bearing	1
5	6005-2RS DIN 625	Ball bearing	1
6	25x1,2 DIN 471	Sicherungsring	1
7	1115.41.02.01	Chain sprocket cpl. with No. 8	1
8	BM 10x30 DIN 564-8.8	Hex. bolt	1
	M10 DIN 934-8	Hex. nut	1
9	A8x7x32 DIN 6885	Feather key	1
10	0709.17	Chain tensioner	1
11	M8x25 DIN 603-8.8	Cup head bolt	1
	M8 DIN 934-8	Spring washer	1
	A8 DIN 127	Hex. nut	1

Key No.	Part-Number	Description	pc.
12	1701.41.02.13	Roller chain	1
13*	2106.21.01.03	Connecting link	1
14	1110.41.02.05	Cranked link	1
15	SPAx1857 Lw DIN 7753	V-belt	2
16	1705.41.03.02	Roller	1
17	1701.41.03.12	Tension rod	1
18	1702.41.03.08	Bush	1
19	M12x60 DIN 603-8.8	Cup head bolt	1
	M12 DIN 934-8	Hex. nut	2
	13 DIN 125	Washer	1
	A12 DIN 127	Spring washer	1
20	M12 DIN 934-8	Hex. nut	1

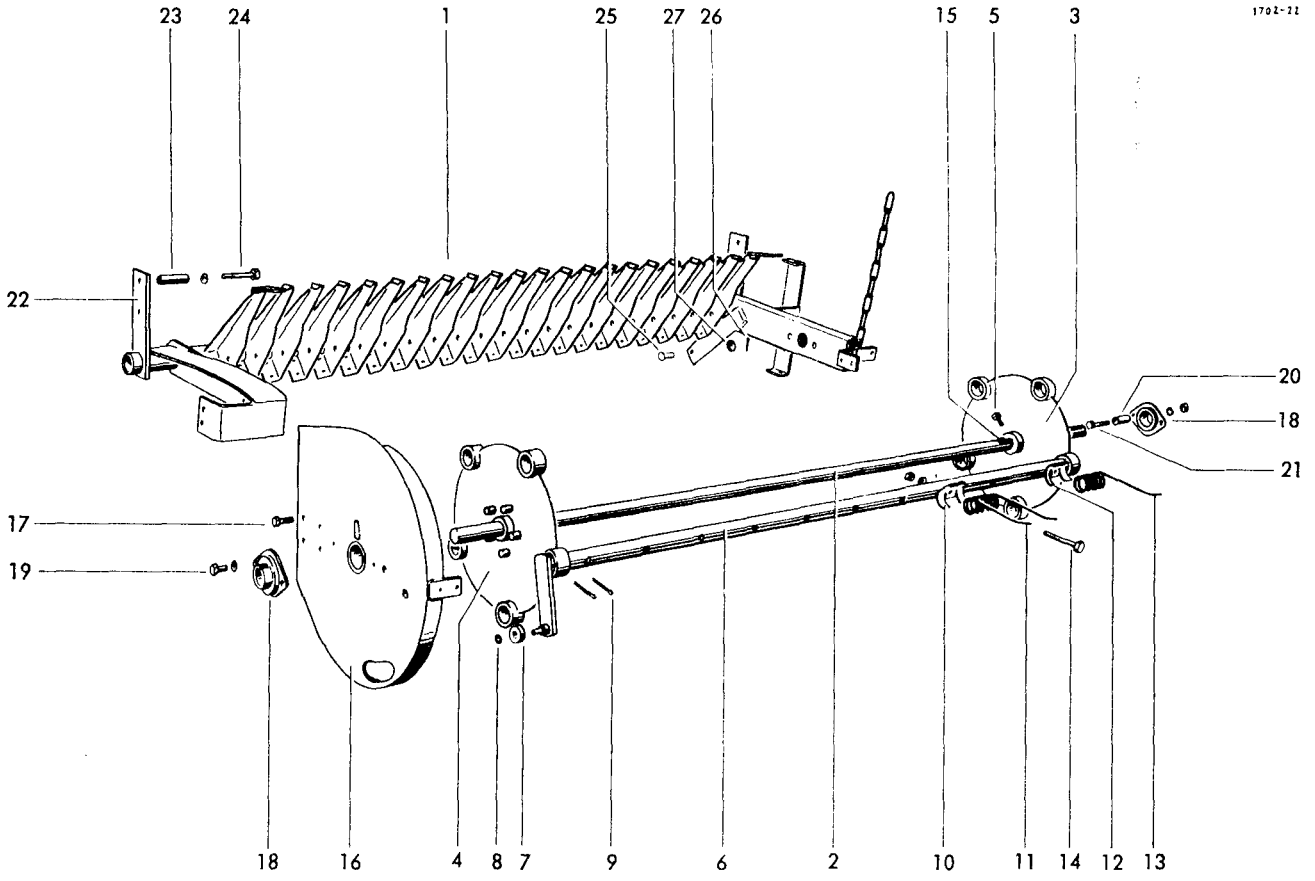

Key No.	Part-Number	Description	pc.
		Pick-up Frame	
1	1702.42.01.01	Frame	1
		Pick-up Reel	
2	1702.42.02.01	Centre shaft	1
3	2101.42.13.01	Bearing plate	1
4	1109.42.02.06	Bearing plate	1
5	BM8x20 DIN 564-8.8	Hex. bolt	2
6-8	1702.42.02.12	Tine bar,cpl.	5
6	1702.42.02.13	Tine bar	5
7	2105.42.03.52	Ball bearing	5
8	10 DIN 6799	Circlip	5
9	6x60 DIN 94	Split pin	10
10	0338.30	Tine holder	50
11	0343.12	Pick-up tine	50
12	0338.85	Tine holder	5
13	0343.48	Pick-up tine	5
14	M10x60 DIN 931-8.8	Hex. bolt	55
	M10 DIN 934-8	Hex. nut	55
	11 DIN 126	Washer	55
	A10 DIN 127	Spring washer	55
15	8x7x40 DIN 6887	Gib key	2

Key No.	Part-Number	Description	pc.
16	0765.26	Guide plate	1
17	M10x30 DIN 933-8.8	Hex. bolt	3
	M10 DIN 934-8	Hex. nut	3
	A10 DIN 127	Spring washer	3
		Reel-Bearing	
18	1121.42.03.01	Flange housing with bearing	2
19	M10x20 DIN 933-8.8	Hex. bolt	2
	A10 DIN 127	Spring washer	2
20	1702.42.04.07	Spacer	2
21	M10x75 DIN 931-8.8	Hex. bolt	2
	M10 DIN 934-8	Hex. nut	2
	A10 DIN 127	Spring washer	2
22	1702.42.01.21	Bracket	1
23	1702.42.08.02	Tube	4
24	M12x90 DIN 931-8.8	Hex. bolt	4
	A12 DIN 127	Spring washer	1
25	0323.27	Pin	1
26	4x25 DIN 94	Split pin	1
27	17 DIN 1441	Washer	1

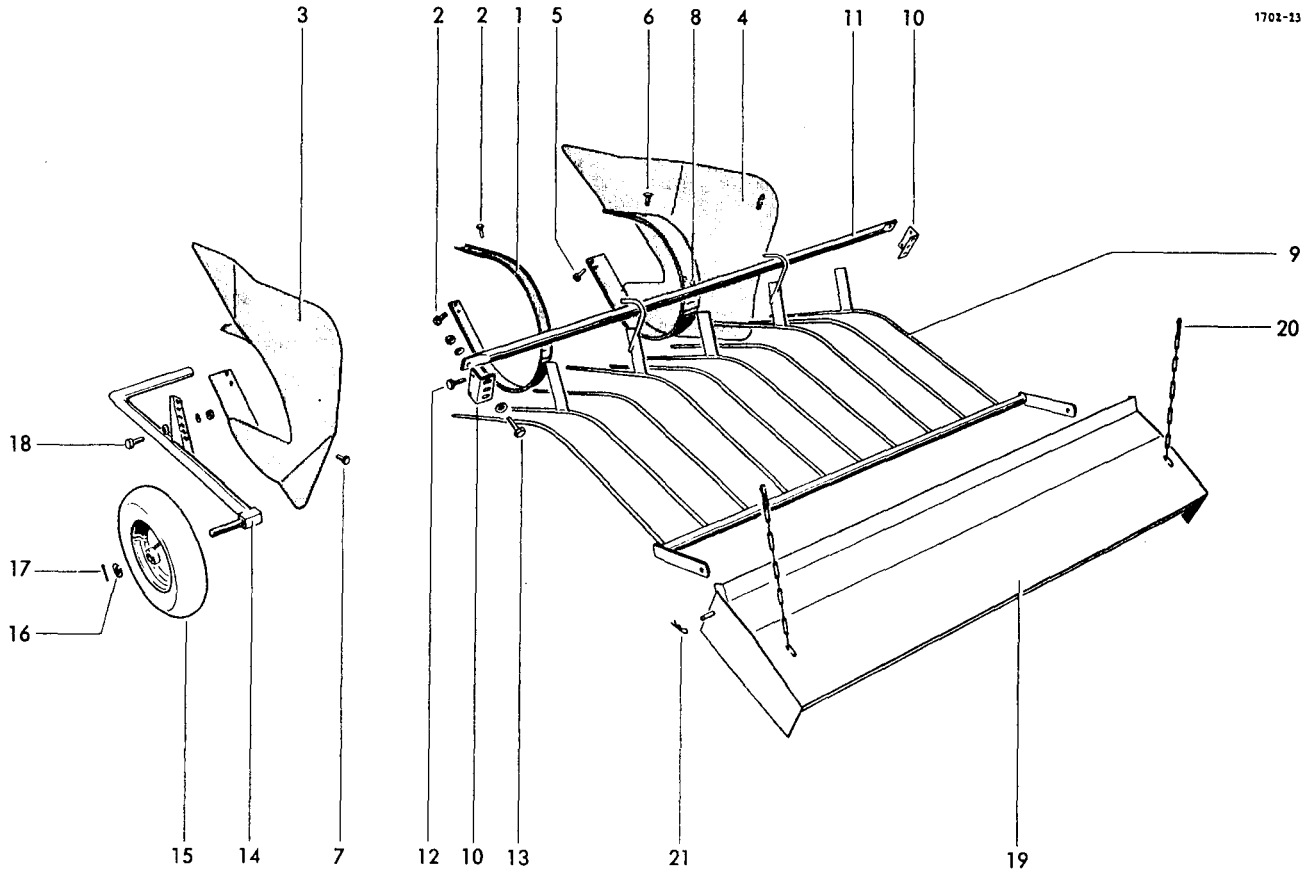

Key No.	Part-Number	Description	pc.
		Segment	
1	1702.42.05.01	Segment	20
2	0320.77	Swagaform bolt	80
		Side Shields	
3	1702.42.06.01	Side shield	1
4	1702.42.06.04	Side shield	1
5	0320.77	Swagaform bolt	4
6	M6x16 DIN 933-8.8	Hex, bolt	4
7	AM6x20 DIN 7513	Self cutting bolt	2
	A6 DIN 127	Spring washer	2
	6.6 DIN 126	Washer	2
8	M8x16 DIN 933-8.8	Hex. bolt	2
	A8 DIN 127	Spring washer	2
		Wind Guard	
9	1702.42.07.01	Wind guard	1
10	1702.42.07.13	Holder	2
11	1702.42.07.14	Tube	1
12	M10x20 DIN 933-8.8	Hex. bolt	4
	M10 DIN 934-8	Hex. nut	4
	A10 DIN 127	Spring washer	4

Key No.	Part-Number	Description	pc.
13	M10x30 DIN 933-8.8	Hex. bolt	2
	M10 DIN 934-8	Hex. nut	2
	11 DIN 126	Washer	2
	A10 DIN 127	Spring washer	2
		Pick-up-Guide Wheel	
14	1702.42.10.01	Guide wheel arm	1
15	1705.42.91.07	Wheel	1
16	26 DIN 1441	Washer	1
17	6x40 DIN 94	Split pin	1
18	M12x30 DIN 933-8.8	Hex. bolt	1
	M12 DIN 934-8	Hex. nut	1
	13 DIN 125	Washer	1
	A12 DIN 127	Spring washer	1
		Pick-up cover shield (special Equipment)	
19	1702.42.92.01	Cover shield	1
20	1105.42.91.05	Hook	2
21	0327.19	Spring clip	2

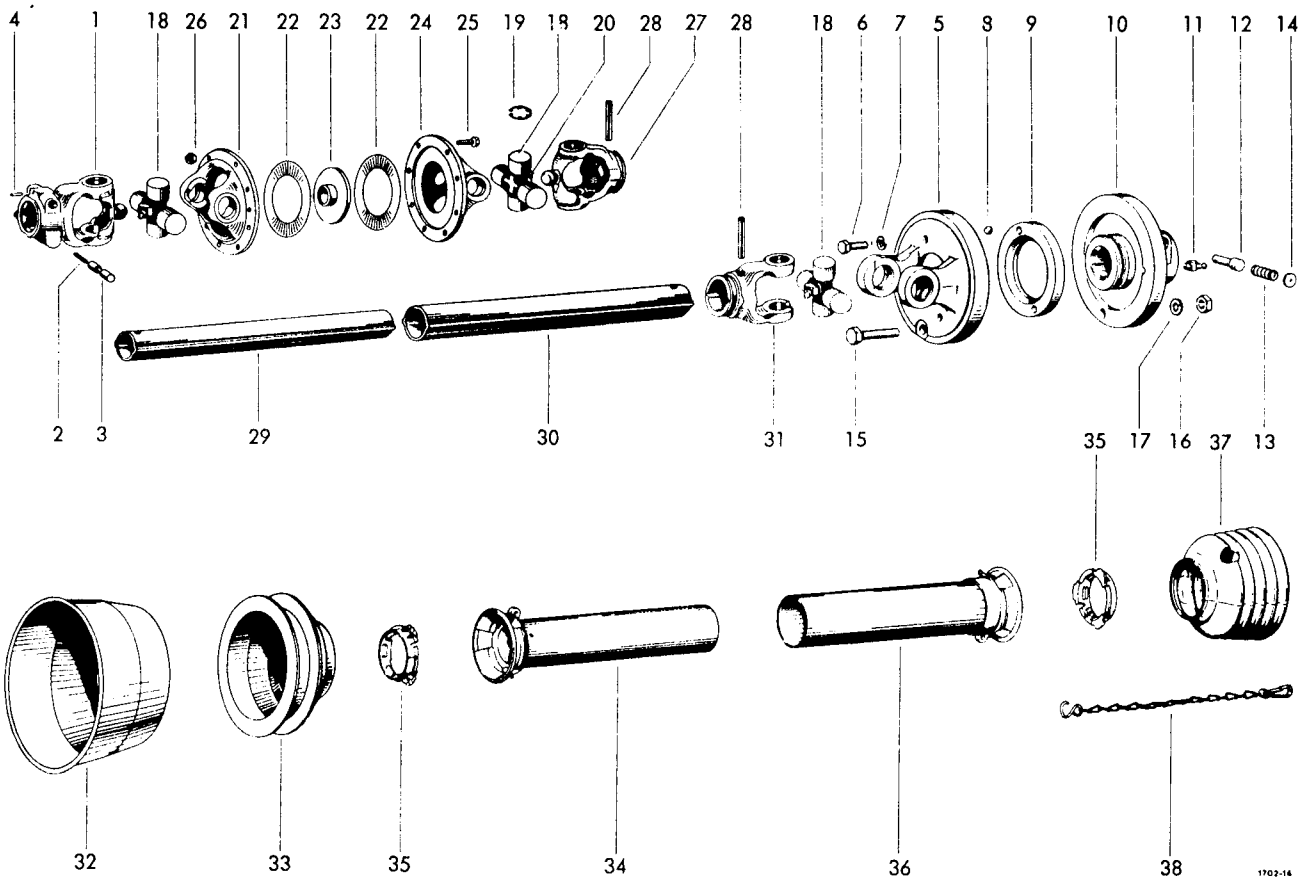

Key No.	Part-Number	Description	pc.
		Universal Drive Shaft	
1-38	1702.12.02.01	Wide angle drive shaft	1
1	22.10.10	End yoke with No. 2-4	1
2	66.01.00	Tension spring	2
3	65.01.00	Slide bolt	2
4	4x20 DIN 1481	Expanding pin	2
5-17	57.122.16	Shear pin clutch cpl.	1
5	22.67.02	Flange yoke	1
6	M8x25 (Verbus-Plus)	Hex. bolt	2
7	A8 DIN 127	Spring washer	2
8	5/16" III DIN 5401	Ball	24
9	16.20.37	Washer	1
10	57.16.17	Flange yoke cpl. with No. 11-14	1
11	BM8x1 DIN 71412	Grease nipple	1
12	65.01.12	Slide bolt	1
13	66.01.49	Tension spring	1
14	16.11.22	Washer	1
15	M7x50 DIN 931-8.8	Hex. bolt	1
16	M7 DIN 934	Hex. nut	1
17	A7 DIN 127	Spring washer	1
18	22.00.00	Spider unit with No. 19 + 20	3
19	62.25.00	circlip	12
20	BM8x1 DIN 71412	Grease nipple	1
21	22.41.00	Flange	1
22	60.68.01	Slip washer	2
23	90.01.01	Guide washer	1
24	22.41.01	Flang yoke	1
25	M8x30 DIN 933	Hex. bolt	8
26	M8 DIN 934	Hex. nut	8
27	22.11.10	Yoke	1
28	10x75 DIN 1481	Expanding pin	2
29	75.25.95	+ Profile tube 1b GA	1
30	75.36.15	+ Profile tube 2a G	1
31	22.12.00	Yoke	1
32-35	82.163	o Inner guard tube cpl.	1
35-37	82.164	▲ Outer guard tube cpl.	1
32	82.84.10	Guard funnel	1
33	82.84.22	Guard funnel	1
34	80.38.03	+ Inner guard funnel	1
35	82.83.04	Guide ring	2
36	80.39.03	+ Outer guard tube	1
37	84.13.05	Guard funnel	1
38	82.36.03	Holding chain	1

\+ state length
o state length and "for 82.84.22"
▲ state length and "for 84.13.05"

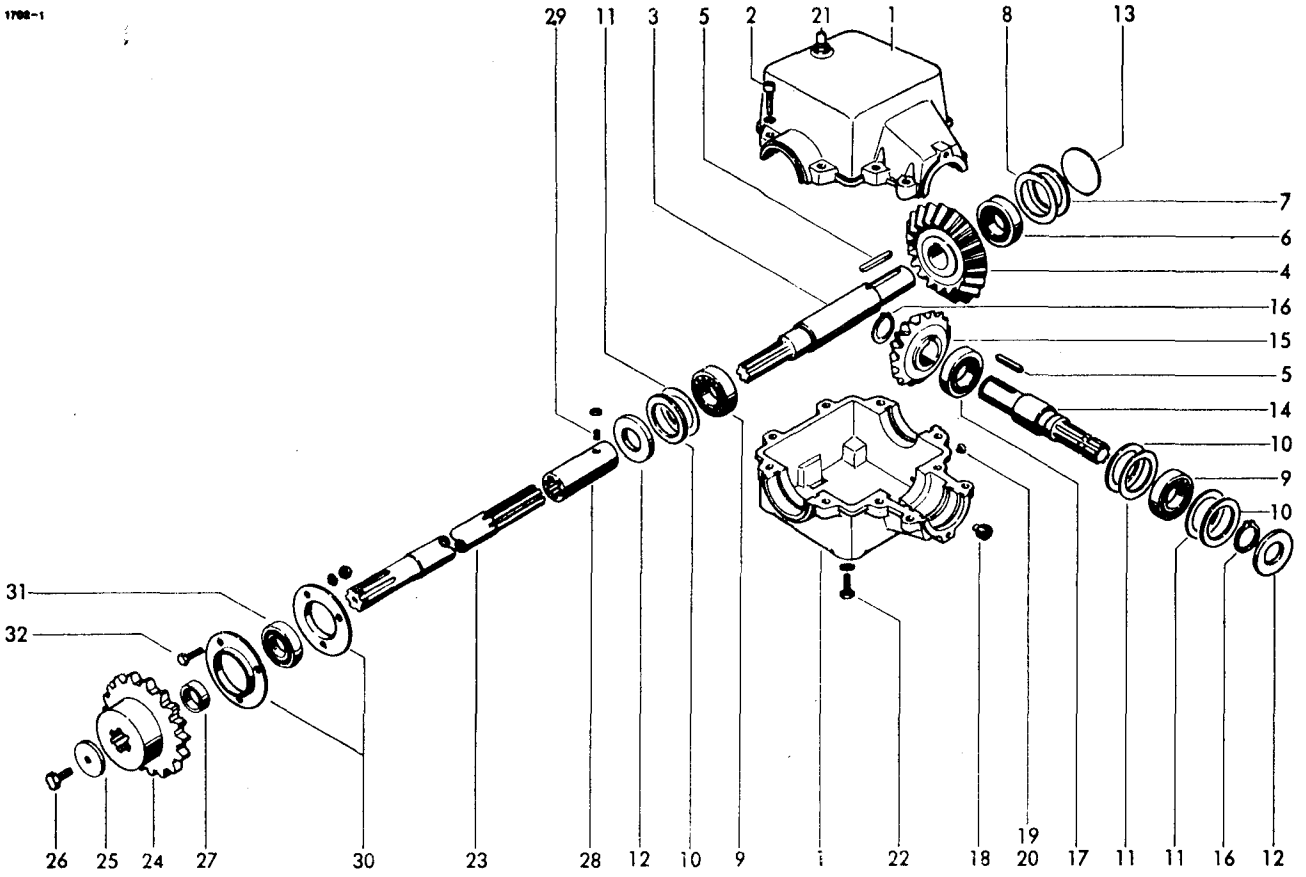

Key No.	Part-Number	Description	pc.
		Gear box	
1-21	1701.12.01.00	Gear box cpl.	1
	1702.12.92.00	● Gear box cpl. without nr. 5,14+15	1
1	1701.12.01.01	Gear housing cpl. with No. 2	1
2	M12x50 DIN 912-8.8	Allan screw	10
	A12 DIN 127	Spring washer	10
3	1701.12.01.10	Shaft	1
4	0307.86	Bevel gear	1
	0307.97	● Bevel gear	1
5	B12x8x50 DIN 6885	Feather key	2
6	6308 DIN 625	Ball bearing	1
7	S75x95 DIN 988	Support washer	1
8	75x95x0,1 DIN 988	Shim washer as required	
	75x95x0,8 DIN 988	" " " "	
	75x95x0,5 DIN 988	" " " "	
9	6208 DIN 625	Ball bearing	2
10	S65x85 DIN 988	Support washer	3
11	65x85x0,1 DIN 988	Shim washer as required	
	65x85x0,3 DIN 988	" " " "	
	65x85x0,5 DIN 988	" " " "	
12	40x80x10 BAFG	Seal	2
13	1701.12.01.21	Cover washer	1
14	1701.12.01.25	Shaft	1
15	0307.87	Pinion	1
15a*	0307.96	● Pinion shaft	1
15b*	1702.12.92.26	● Bush for No. 15a	1

● Gear box 1000 rpm

Key No.	Part-Number	Description	pc.
16	40x1.75 DIN 471	Circlip	2
17	NUP 2208E DIN 5412	Roller bearing	1
18	M18x1.5 keg DIN 906-5.8	Locking screw with magnet	1
19	M6x16 DIN 7985-4.8	Slotted head screw	1
20	A6.5x9,5 DIN 7603	Seal	1
21	M18x1.5 keg EV1002-05-00	Breather	1
22	M12x30 DIN 933-8.8	Hex. bolt	4
	A12 DIN 127	Spring washer	4
		Cross Drive	
23	1702.12.04.01	Cross shaft	1
24	0309.11	Chain sprocket	1
25	0328.34	Spring washer	1
26	M12x25 DIN 933-8.8 Verbus-Plus	Hex. bolt	1
27	1702.12.04.05	Tube	1
28	1701.12.04.04	Profile bush	1
29	M10x20 DIN 914	Grub screw	1
	M10 DIN 934-8	Hex. nut	1
		Support Bearing	
30	0318.18	Bearing flange	2
31	76207-2RS	Ball bearing	1
32	M10x25 DIN 933-8.8	Hex. bolt	3
	M10 DIN 934-8	Hex. nut	3
	A10 DIN 127	Spring washer	3

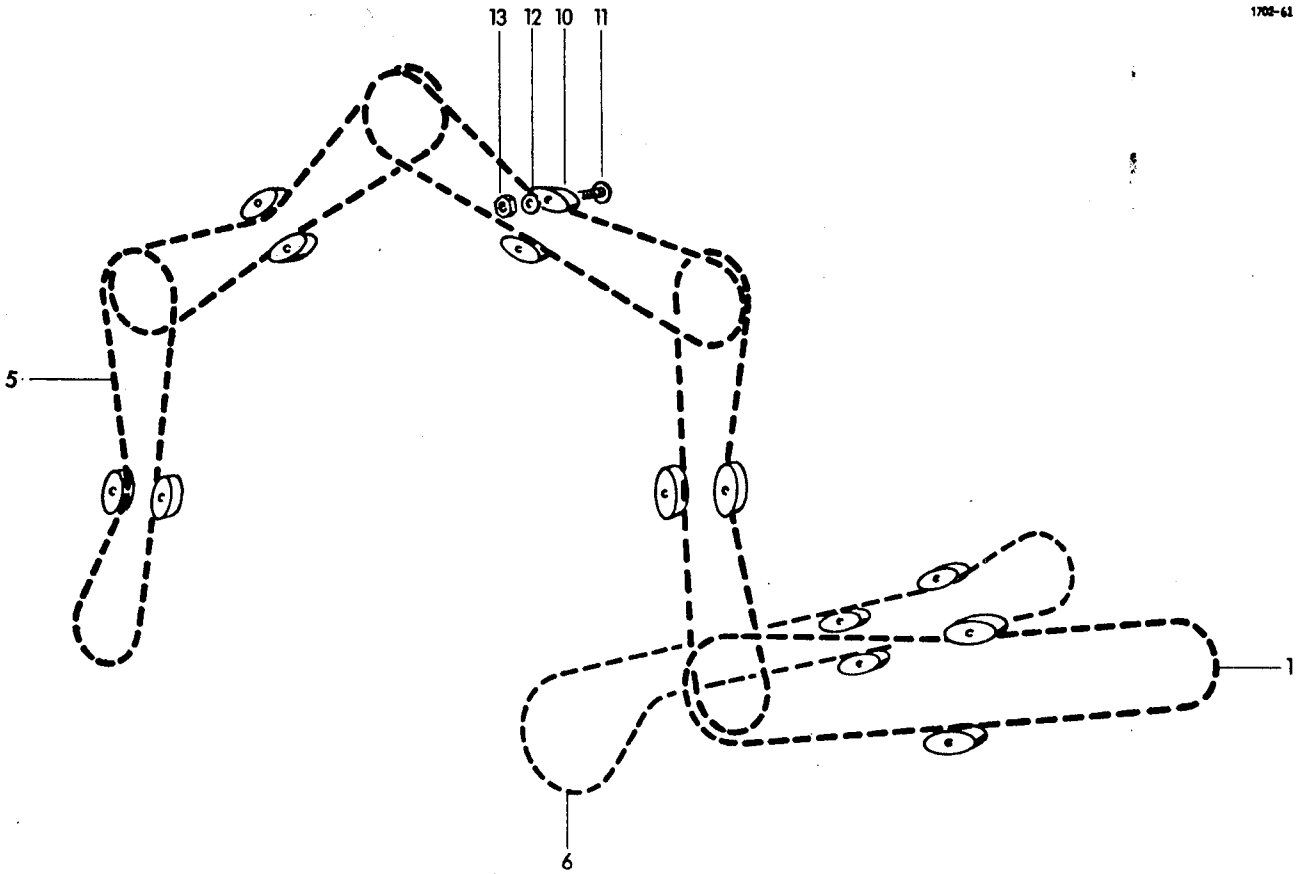

Key No.	Part-Number	Description	pc.
		Drive Chains	
1	1702.25.02.01	Roller chain with No. 2	1
2*	1705.25.09.03	Connecting link for No. 1	1
3*	1705.25.09.02	Inner link for No. 1	1
4	1702.25.02.08	Roller chain with No. 6	4
4*	C-20 B-1 DIN 8187	Cranked double link for No. 1	1
5	1702.25.02.08	Roller chain with No. 7	4
6	1702.25.02.10	Roller chain with No. 7+9	1
7*	1701.25.02.13	Connecting link for No.5+6	5
8*	1105.14.04.21	Inner link for No. 5+6	5
9*	1701.25.02.14	Cranked double link for No. 6	1

Key No.	Part-Number	Description	pc.
		Chain Guide and Tensioner	
10	1705.25.06.01	Tension block	13
11	M10x75 DIN 603-8.8	Cup head bolt	13
12	R11 DIN 440	Washer	13
13	NM10 DIN 980-8	Safety nut	13

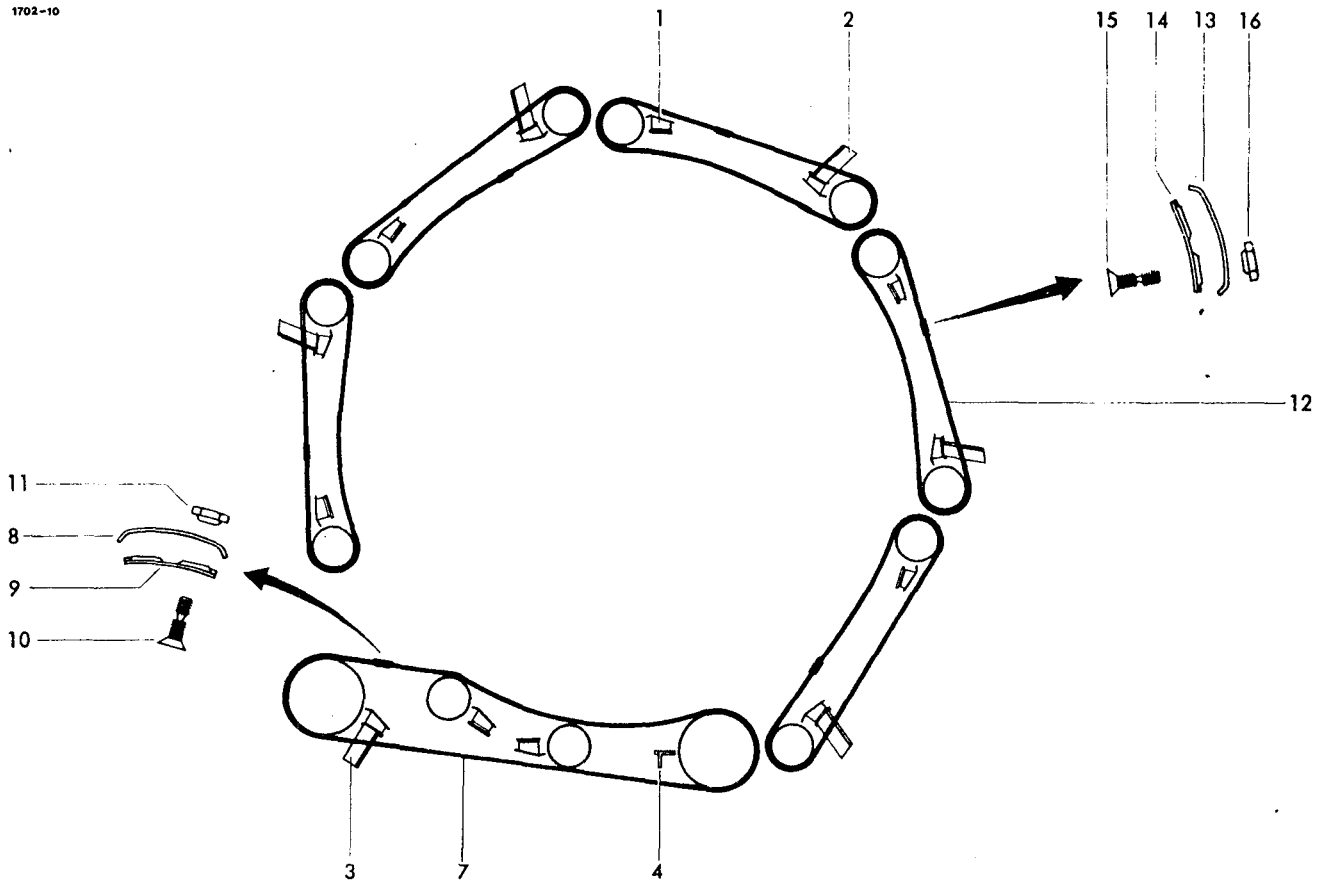

Key No.	Part-Number	Description	pc.
		Scraper	
1	1702.23.01.01	Scraper	7
2	1702.23.02.01	Scraper with guide	5
3	1702.23.03.01	Bottom scraper with guide	1
4	1701.23.04.01	Angle scraper	1
5*	0320.81	Safety bolt for No.1-4	28
6*	0328.33	Safety bolt for No.1-4	28
		Flat Belts	
7	1701.25.01.71	Flat belt	5
8	1701.25.01.72	Top plate	5
9	1701.25.01.73	Bottom plate	5
10	0320.30	Bolt	120
11	0320.31	Hex. nut	120
12	1701.25.01.81	Flat belt	55
13	1705.25.01.32	Too plate	55
14	1705.25.01.33	Bottom plate	55
15	0320.30	Bolt	550
16	0320.31	Hex. nut	550

Key No.	Part-Number	Description	pc.
		Tools	
17-22*	1701.82.01.01	Tool kit cpl.	1
17*	1121.82.02.02	Tool bag	1
18*	10x13 DIN 895	Spanner	1
19*	17x19 DIN 895	Spanner	1
20*	17 DIN 659	Box spanner	1
21*	1101.82.02.06	Tool bar	1
22*	11 A DIN 659	Box spanner	1
23*	1701.82.01.16	Threading wire	1
24*	1121.02.95.01	+Chock	
25*	M 7x50 DIN 931-8.8	○Hex. bolt	5
	M 7 DIN 934-8	○Hex. nut	5
	A 7 DIN 127	○Spring washer	5
26*	1702.82.02.11	△Chain lubricant	1 kg
27*	1702.82.02.12	△Chain lubricant	5 kg

+ included in twine box
○Plastic bag in twine box for safety clutch in universal shaft
△Extra equip

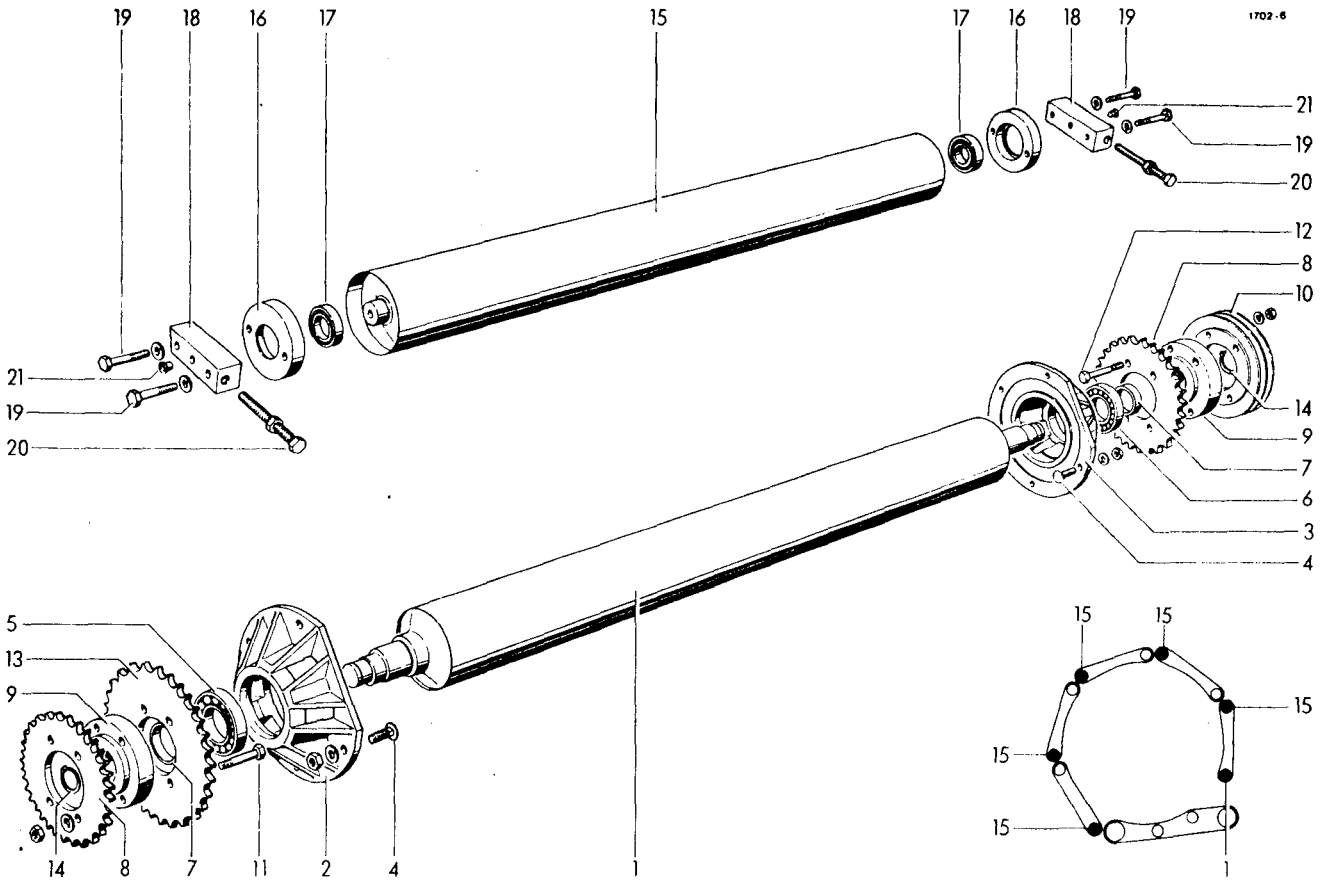

Key No.	Part-Number	Description	pc.
		Main Drive Roller	
1	1702.14.01.05	Roller	1
2	0712.25	Bearing housing	1
3	0712.22	Bearing housing	1
4	M 10x30 DIN 603-8.8	Cup head bolt	10
	M 10 DIN 934-8	Hex. bolt	10
	A 10 DIN 127	Spring washer	10
5	6210-2RS DIN 625	Ball bearing	1
5a	0328.49	Bush	1
6	76208-2RS	Ball bearing	1
6a*	0328.48	Bush for No. 6	1
7	0328.43	Bush	1
8	0309.25	Chain sprocket	2
9	1705.14.02.10	Hub	2
10	0703.20	V-Belt pulley	1
11	M 12x80 DIN 931-8.8	Hex. bolt	4
	M 12 DIN 934-8	Hex. nut	4
	A 12 DIN 127	Spring washer	4

Key No.	Part-Number	Description	pc.
12	M 12x110 DIN 931-8.8	Hex. bolt	4
	M 12 DIN 934-8	Hex. bolt	4
	A 12 DIN 127	Spring washer	
13	0309.24	Chain sprocket	1
14	30x1,5 DIN 471	Circlip	2
		Tension Roller	
15	1702.15.01.01	Roller	5
16	1705.15.02.01	Bearing ring	10
17	76207-2RS	Ball bearing	10
18	1705.15.02.03	Tension block	10
19	M 10x55 DIN 931-8.8	Hex. bolt	20
	A 10 DIN 127	Spring washer	20
20	M 12x80 DIN 933-8.8	Hex. bolt	10
	M 12 DIN 934-8	Hex. nut	10
21	B114	Plug	20

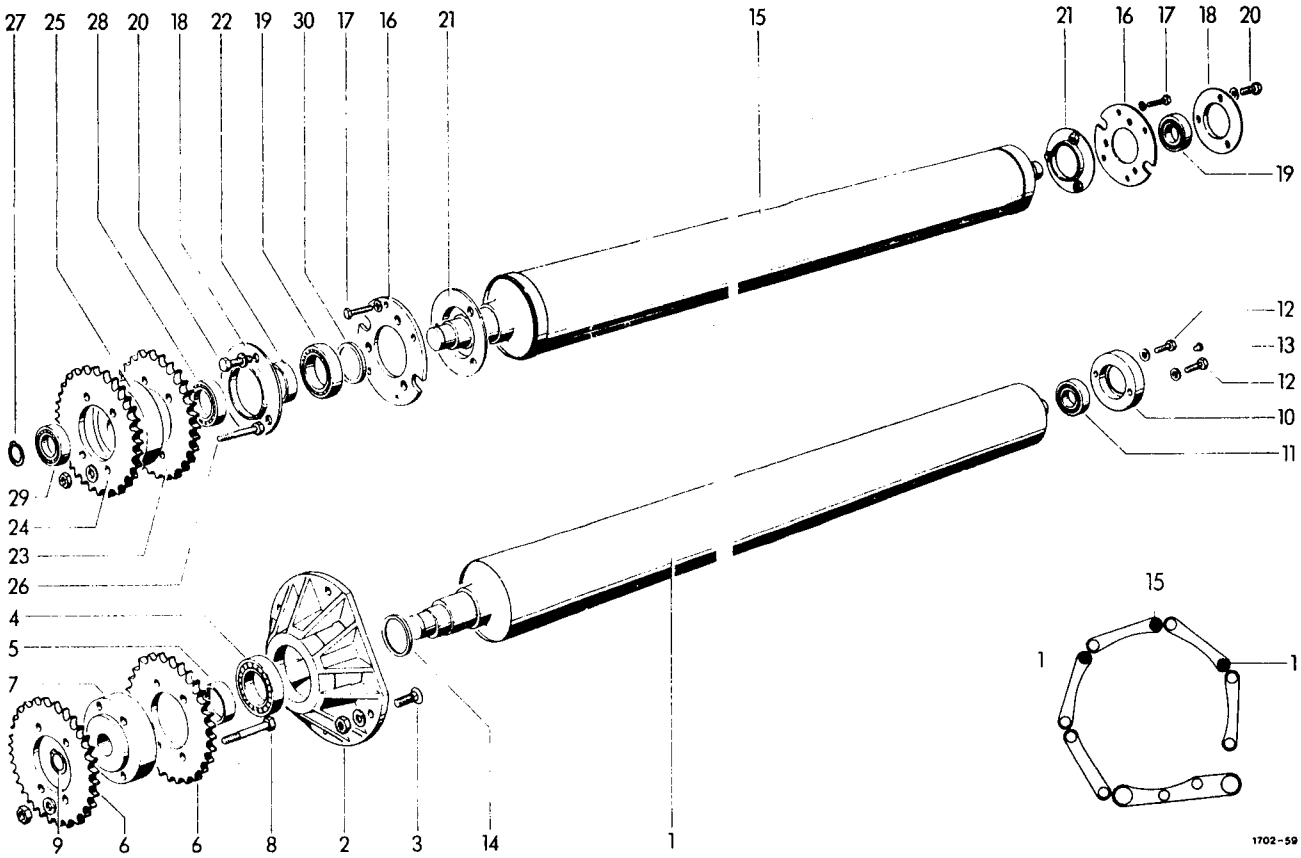

Key No.	Part-Number	Description	pc.
		Drive Roller	
1	1702.16.01.01	Roller	2
2	0712.22	Bearing housing	2
3	M 10x30 DIN 603-8.8	Cup head bolt	10
	M 10 DIN 934-8	Hex. nut	10
	A 10 DIN 127	Spring washer	10
4	76208-2RS	Ball bearing	2
5	0328.43	Bush	2
6	0309.23	Chain sprocket	4
6a	0309.25	Chain sprocket	2
7	1705.14.02.10	Hub	2
8	M 12x80 DIN 931-8.8	Hex. bolt	8
	M 12 DIN 934-8	Hex. nut	8
	A 12 DIN 127	Spring washer	8
9	30x1,5 DIN 471	Circlip	2
10	1705.15.02.01	Bearing ring	2
11	76207-2RS	Ball bearing	2
12	M 10x20 DIN 933-8.8	Hex. bolt	4
	A 10 DIN 127	Spring washer	4
13	B114	Plug	2
14	0328.48	Bush	2

Key No.	Part-Number	Description	pc.
		Hinged Roller	
15	1702.17.01.01	Roller	1
16	1705.17.02.01	Flange	2
17	M 8x30 DIN 933-8.8	Hex. bolt	8
	A 8 DIN 127	Spring washer	8
18	0318.27	Bearing flange	2
19	76208-2RS	Ball bearing	2
20	M 8x20 DIN 933-8.8	Hex. bolt	6
	A 8 DIN 127	Spring washer	6
21	1705.17.02.11	Bearing flange	2
22	0328.43	Bush	1
23	0309.25	Chain sprocket	1
24	0309.23	Chain sprocket	1
25	1705.17.02.19	Hub	1
26	M 12x75 DIN 931-8.8	Hex. bolt	4
	M 12 DIN 934-8	Hex. nut	4
	A 12 DIN 127	Spring washer	4
27	30x1,5 DIN 471	Circlip	1
28	6008-2RS DIN 625	Ball bearing	1
29	6206-2RS DIN 675	Ball bearing	1
30	0328.48	Bush	1

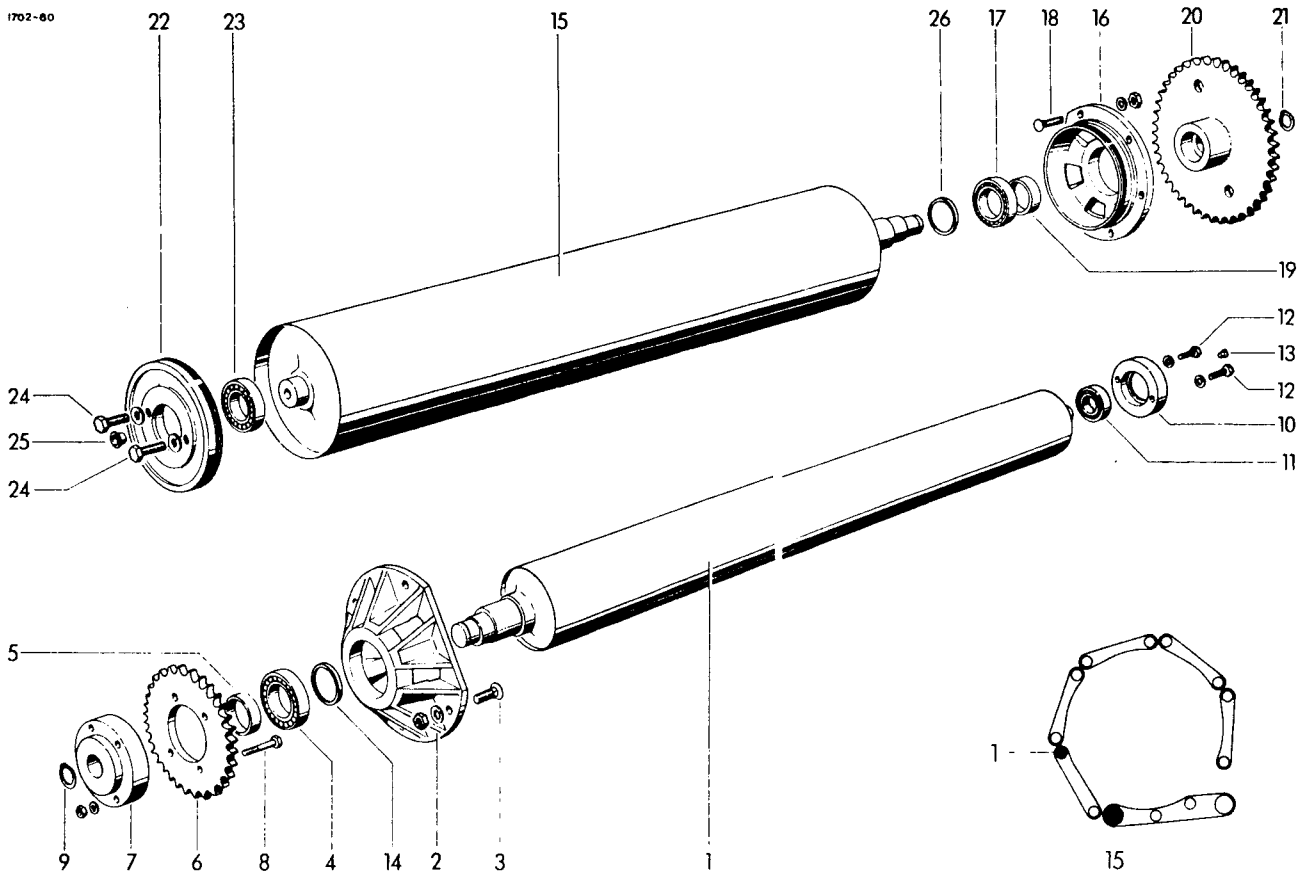

Key No.	Part-Number	Description	pc.
		End Roller	
1	1702.16.01.01	Roller	1
2	0712.22	Bearing housing	1
3	M 10x30 DIN 603-8.8	Cup head bolt	5
	M 10 DIN 934-8	Hex. nut	5
	A 10 DIN 127	Spring washer	5
4	76208-2RS	Ball bearing	1
5	0328.43	Bush	1
6	0309.25	Chain sprocket	1
7	1705.14.02.10	Hub	1
8	M 12x65 DIN 931-8.8	Hex. bolt	4
	M 12 DIN 934-8	Hex. nut	4
	A 12 DIN 127	Spring washer	4
9	30x1,5 DIN 471	Circlip	1
10	1705.15.02.01	Bearing ring	1
11	76207-2RS	Ball bearing	1
12	M 10x20 DIN 933-8.8	Hex. bolt	2
	A 10 DIN 127	Spring washer	2
13	B114	Plug	1
14	0328.48	Bush	1

Key No.	Part-Number	Description	pc.
		Bottom Drive Roller	
15	1702.19.01.01	Roller	1
16	0712.23	Bearing housing	1
17	76208-2RS	Ball bearing	1
18	M 10x30 DIN 603-8.8	Cup head bolt	5
	M 10 DIN 934-8	Hex. nut	5
	A 10 DIN 127	Spring washer	5
19	0328.43	Bush	1
20	1705.19.02.13	Chain sprocket	1
21	30x1,5 DIN 471	Circlip	1
22	0712.24	Bearing ring	1
23	76207-2RS	Ball bearing	1
24	M 10x20 DIN 933-8.8	Hex. bolt	2
	A 10 DIN 127	Spring washer	2
25	B114	Plug	1
26	0328.48	Bush	1

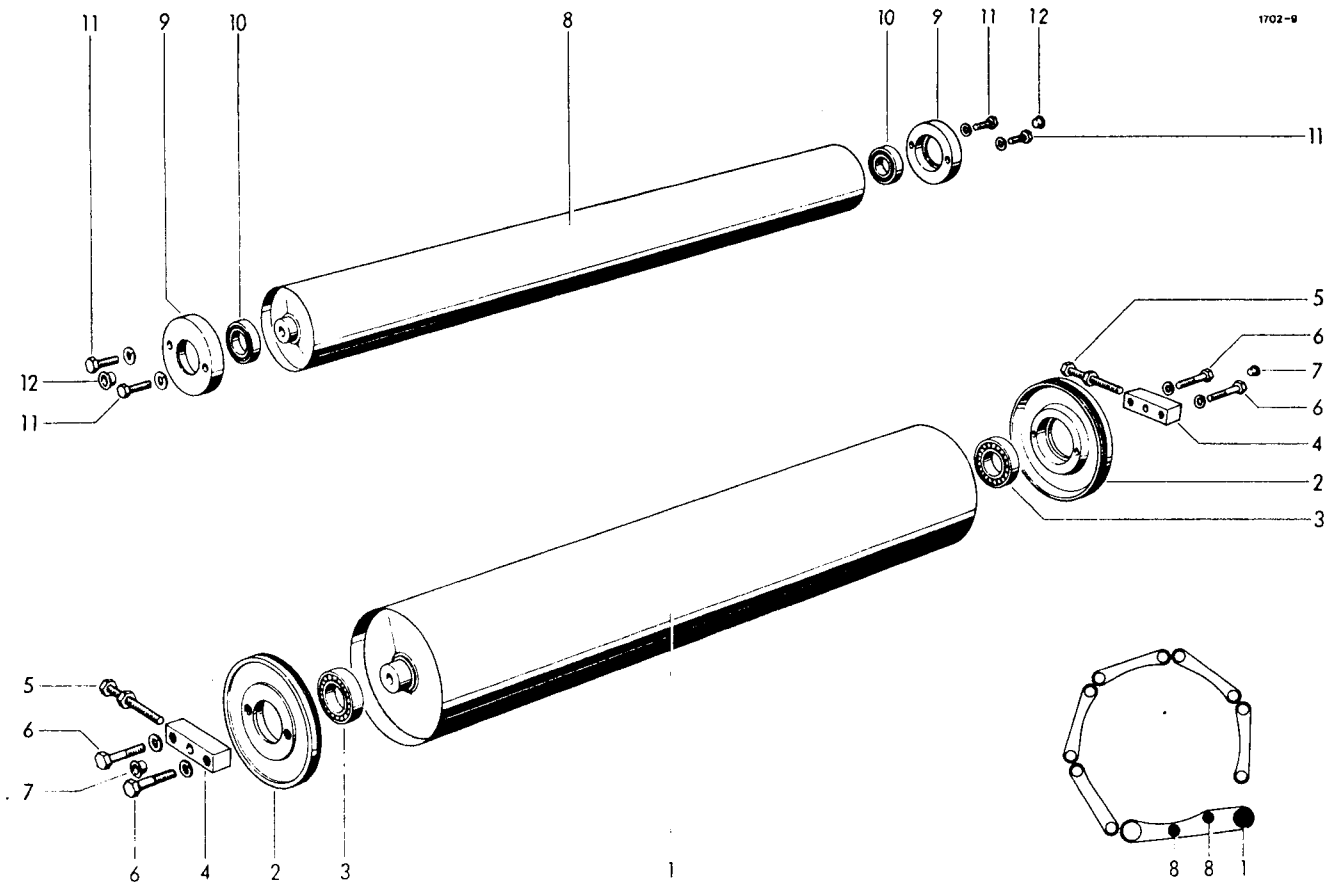

Key No.	Part-Number	Description	pc.
		Bottom Tension Roller	
1	1702.20.01.01	Roller	1
2	0712.24	Bearing ring	2
3	76207-2RS	Ball bearing	2
4	1705.15.02.03	Tension block	2
5	M12x80 DIN 933-8.8	Hex. bolt	2
	M12 DIN 934-8	Hex. nut	2
6	M10x55 DIN 931-8.8	Hex. bolt	4
	A10 DIN 127	Spring washer	4
7	B114	Plug	2

Key No.	Part-Number	Description	pc.
		Support Roller	
8	1702.15.01.01	Roller	2
9	1705.15.02.01	Bearing ring	4
10	76207-2RS	Ball bearing	4
11	M10x20 DIN 933-8.8	Hex. bolt	8
	A10 DIN 127	Spring washer	8
12	B114	Plug	4

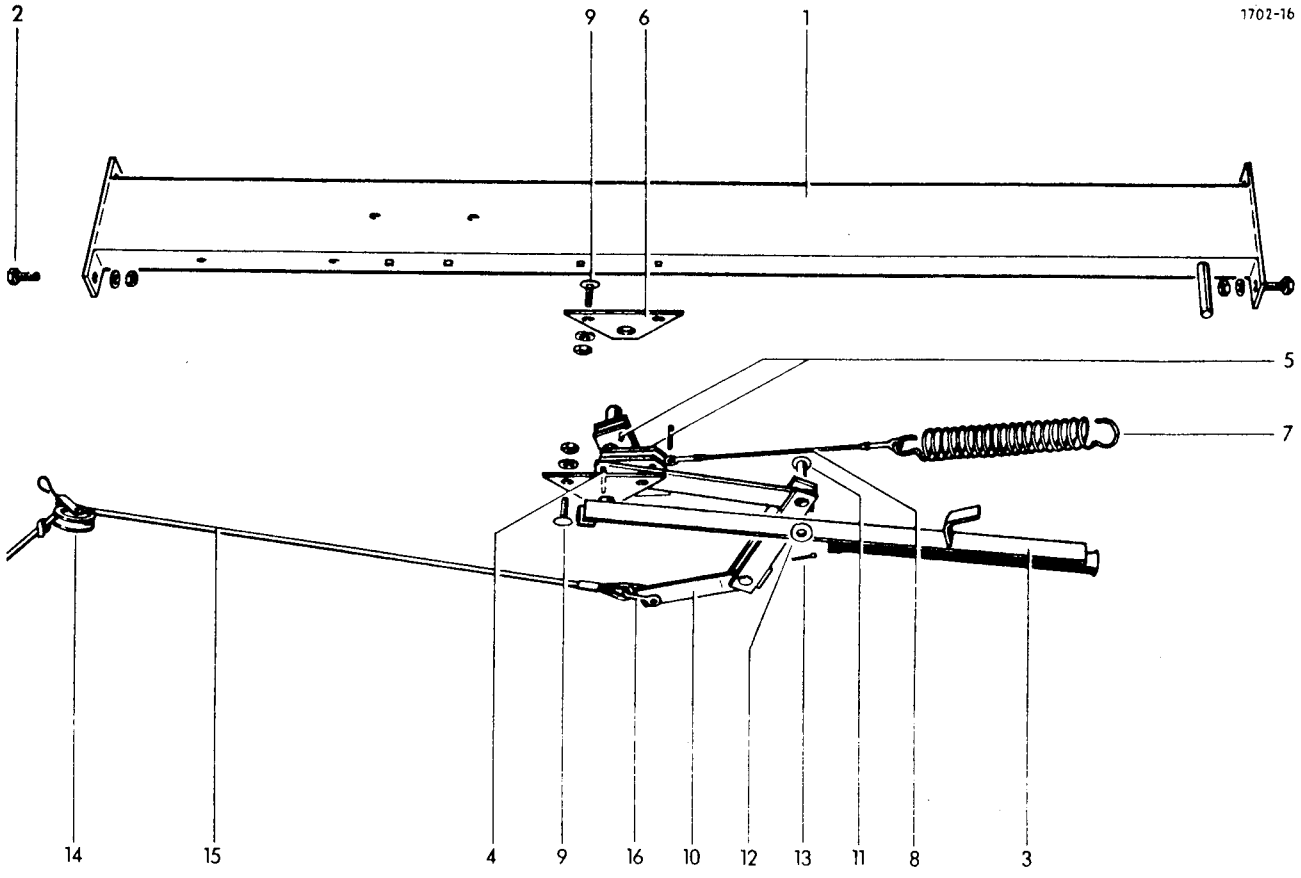

Key No.	Part-Number	Description	pc.
		Beam	
1	1701.30.01.01	Beam	1
2	M8x20 DIN 939-8.8	Hex. bolt	4
	M8 DIN 934-8	Hex. nut	4
	A8 DIN 127	Spring washer	4
		Tying Unit	
3	1701.30.02.01	Twine guide cpl. with No. 4+5	1
4	5x36 DIN 1481	Expanding pin	1
5	6x20 DIN 1481	Expanding pin	3
6	1701.28.02.12	Bearing plate	1
7	0341.51	Tension spring	1
8	1701.28.02.18	Rope	1
9	M8x20 DIN 603-8.8	Cup head bolt	4
	M8 DIN 934-8	Hex. nut	4
	A8 DIN 127	Spring washer	4

Key No.	Part-Number	Description	pc.
		Hand Tying	
10	1701.30.15.01	Lever	1
11	0321.06	Rivet	1
12	11 DIN 126	Washer	1
13	4x25 DIN 94	Split pin	1
14	1701.28.02.22	Roller	1
15	1701.28.02.23	Rope	1
16	80,4 DIN 82101	Shackle	1

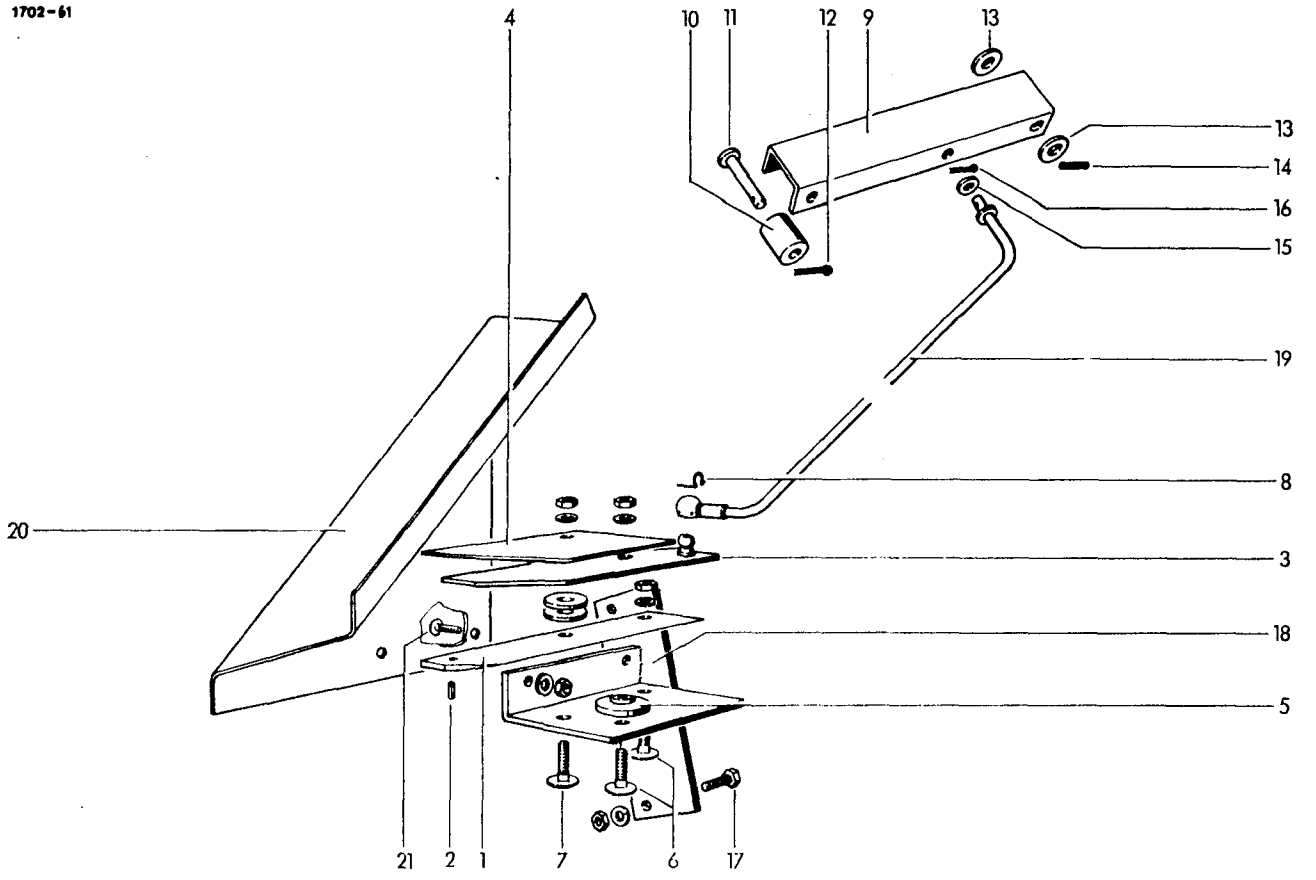

Key No.	Part-Number	Description	pc.
		Cutting Unit	
1	1705.28.02.38	Knife cpl. with No. 2	1
2	5x12 DIN 1481	Expanding pin	1
3	1701.28.03.06	Lever	1
4	1705.28.02.41	Clamping plate	1
5	1701.28.03.10	Washer	1
6	M6x25 DIN 603-8.8	Cup head bolt	2
	M6 DIN 934-8	Hex. nut	2
	A6 DIN 127	Spring washer	2
7	M6x25 DIN 603-8.8	Cup head bolt	1
	M6 DIN 934-8	Hex. nut	1
	A6 DIN 127	Spring washer	1
	R6.6 DIN 440	Washer	2
8	S13 DIN 71805	Safety clip	1
9	1701.28.03.37	Lever	1
10	0326.27	Roller	1
11	12h 11x60x53 DIN	Pin	1

Key No.	Part-Number	Description	pc.
12	4x20 DIN 94	Split pin	1
13	17 DIN 125	Washer	2
14	4x28 DIN 1481	Expanding pin	1
15	11 DIN 126	Washer	1
16	4x20 DIN 94	Split pin	1
17	M8x20 DIN 933-8.8	Hex. bolt	2
	M8 DIN 934-8	Hex. nut	2
	A8 DIN 127	Spring washer	2
18	1701.28.03.33	Pillow block	1
19	1701.28.03.35	Connecting rod	1
		Guards	
20	1701.28.05.08	Cover	1
21	M6x16 DIN 603-8.8	Cup head bolt	2
	M6 DIN 934-8	Hex. nut	2
	6.6 DIN 126	Washer	2

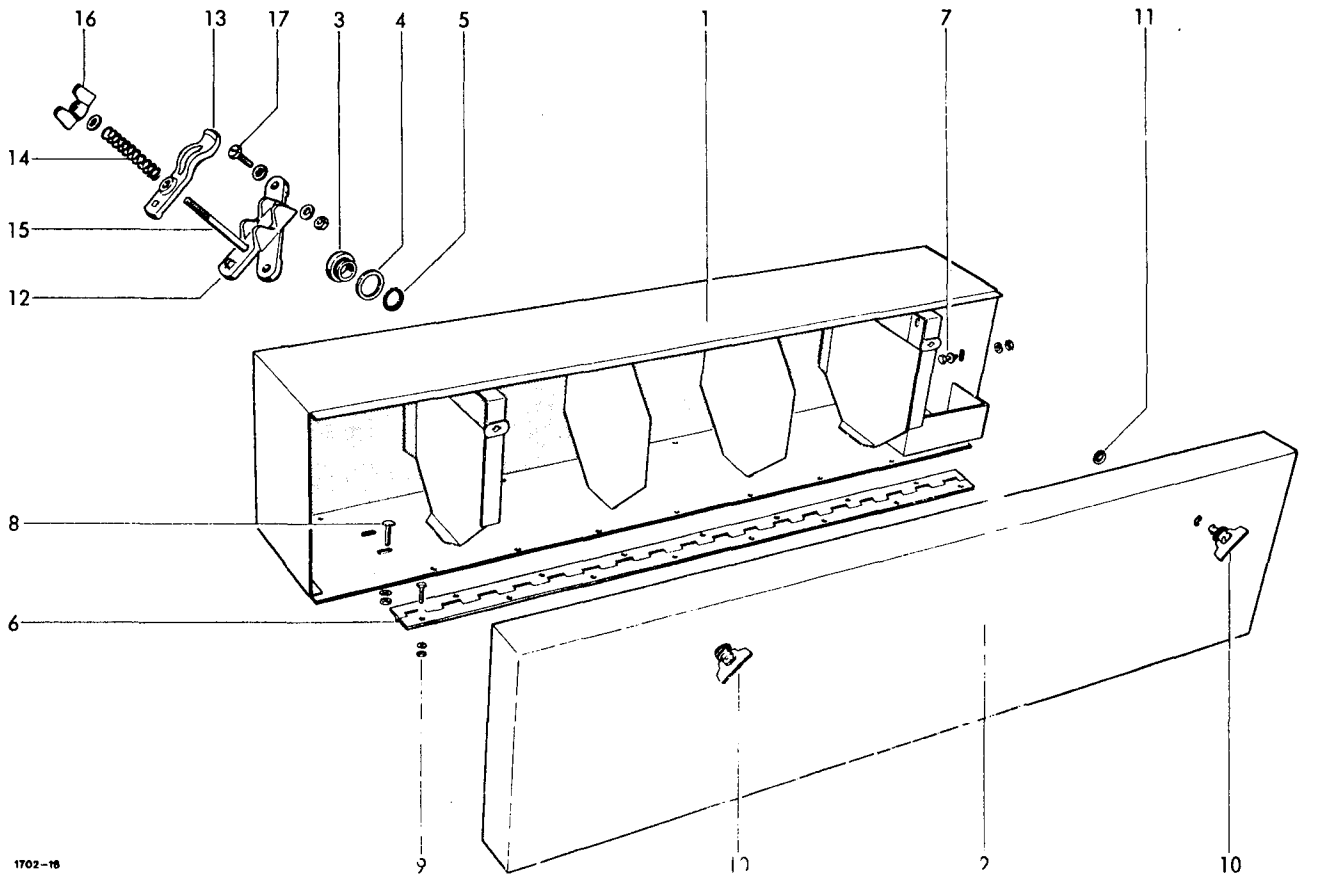

Key No.	Part-Number	Description	pc.
		Twine Box	
1	1702.28.04.01	Box	1
2	1702.28.04.12	Cover	1
3	0361.08	Twine guide eye	1
4	0324.04	Washer	1
5	20x1.2 DIN 471	Circlip	1
6	1702.28.04.16	Hinge	1
7	M8x16 DIN 933-8.8	Hex. bolt	2
	M8 DIN 934-8	Hex. nut	2
	8.4 DIN 125	Washer	2
	A8 DIN 127	Spring washer	2
8	M8x16 DIN 603-8.8	Cup head bolt	2
	M8 DIN 934-8	Hex. nut	2
	A8 DIN 127	Spring washer	2
9	M6x10 DIN 933-8.8	Hex. bolt	15
	M6 DIN 934-8	Hex. nut	15
	A6 DIN 127	Spring washer	15

Key No.	Part-Number	Description	pc.
10	1705.51.08.19	Winged head, hinged	2
11	1307.51.08 25	Holding washer	2
		Twine Tensioner	
12-17	1101.22.14.30	Twine tensioner cpl.	1
12	0761.02	Bottom halfe	1
13	0761.03	Top halfe	1
14	0340.25	Tension spring	1
15	M6x20 DIN 603-8.8	Cup head bolt	1
16	M6 DIN 315	Wing nut	1
	7 DIN 126	Washer	1
17	M6x20 DIN 84	Cheese head bolt	2
	M6 DIN 934-8	Hex. nut	2
	7 DIN 126	Washer	2
	A6 DIN 127	Spring washer	2

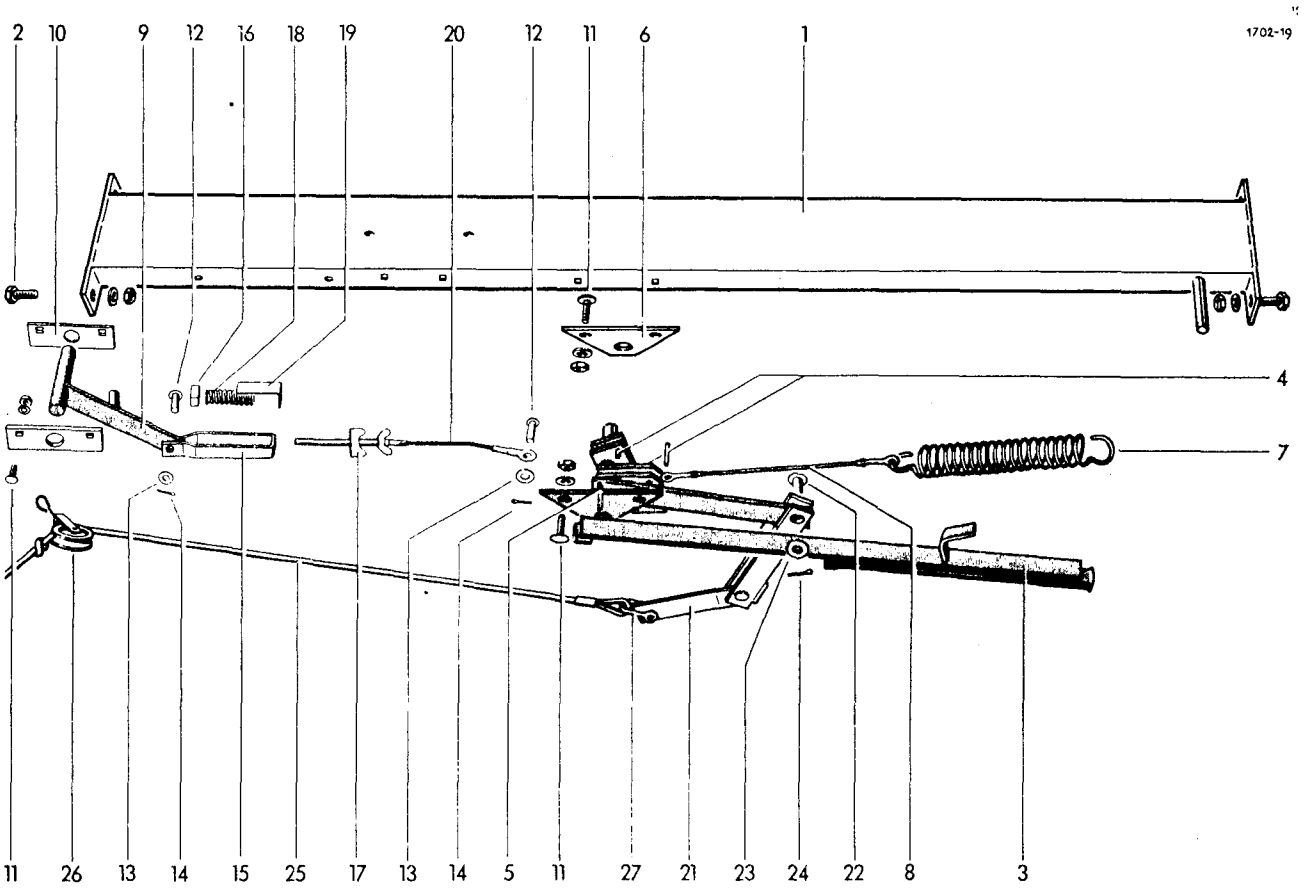

Key No.	Part-Number	Description	pc.
		Automatic Tying Unit (Special Equipment)	
		Beam	
1	1701.30.01.01	Beam	1
2	M8x20 DIN 933-8.8	Hex. bolt	4
	M8 DIN 934-8	Hex. nut	4
	A8 DIN 127	Spring washer	4
		Tying Unit	
3	1701.30.02.01	Twine guide cpl.	1
4	6x20 DIN 1481	Expanding pin	5
5	5x36 DIN 1481	Expanding pin	1
6	1701.28.02.12	Bearing plate	1
7	0341.51	Tension spring	1
8	1701.28.02.18	Rope	1
9	1701.30.02.23	Lever	1
10	1701.30.02.28	Bracket	2
11	M8x20 DIN 603-8.8	Cup head bolt	8
	M8 DIN 934-8	Hex. nut	8
	A8 DIN 127	Spring washer	8
12	0321.06	Rivet	2
13	10.5 DIN 125	Washer	2
14	4x25 DIN 94	Split pin	2
15	1701.30.02.40	Tension bracket	1
16	1701.30.02.41	Square nut	1
17	M8 DIN 315	Wing nut	1
18	0340.04	Spring	1
19	1109.23.04.14	Angle	1
20	1701.30.02.46	Rope	1
		Hand Tying	
21	1701.30.15.01	Lever	1
22	0321.06	Rivet	1
23	11 DIN 125	Washer	1
24	4x25 DIN 94	Split pin	1
25	1701.28.02.23	Rope	1
26	1701.28.02.22	Roller	1
27	B0,4 galvanized DIN 82101	Shackle	1

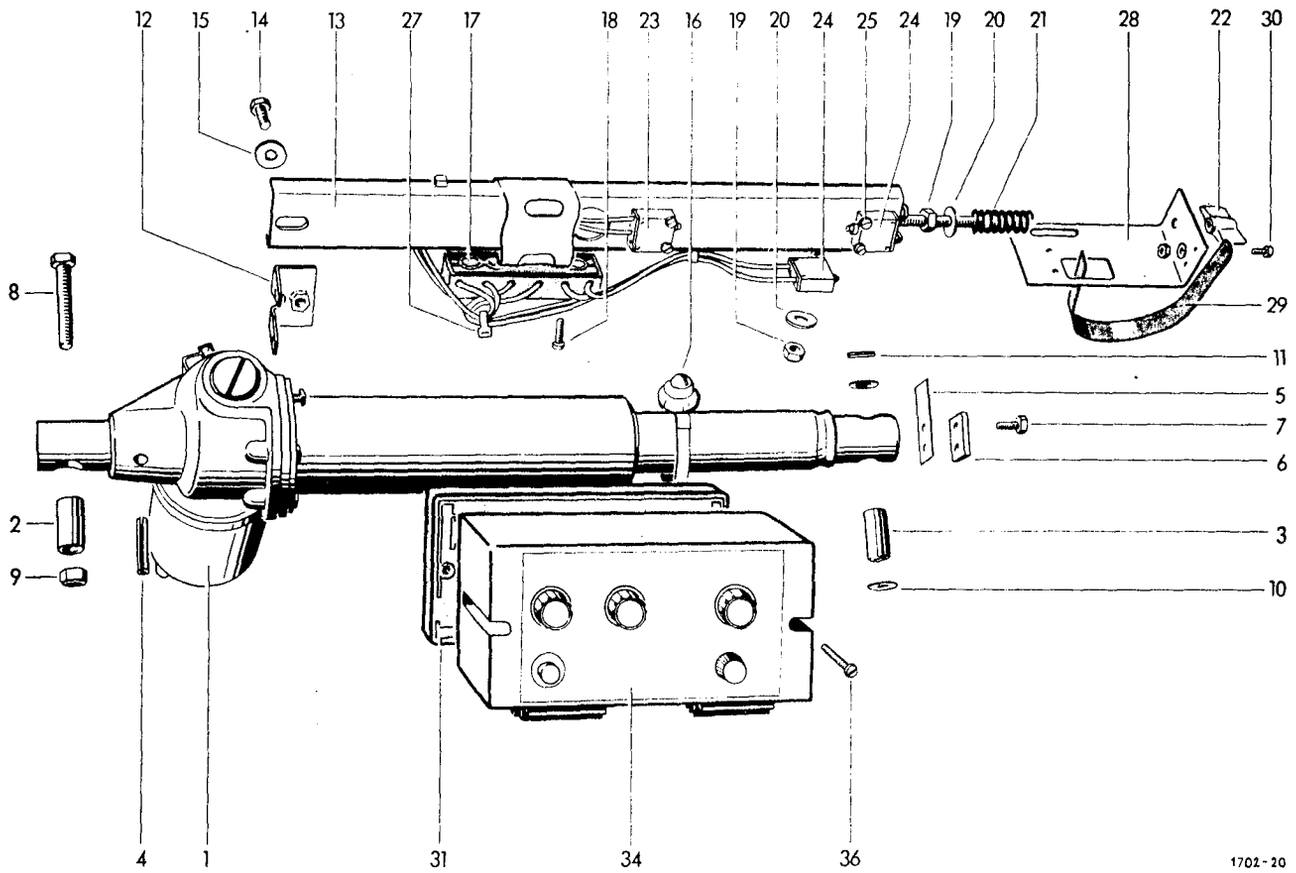

Key No.	Part-Number	Description	pc.
		Automatic Tying Unit (Special Equipment)	
		Motor	
1-7	1701.30.08.01	Shifting motor	1
1	1701.30.08.02	Motor	1
2	0313.21	Bush	1
3	0313.20	DU-Bush	1
4	6x36 DIN 1481	Expanding pin	1
5	0344.87	Plate spring	1
6	1701.30.08.07	Pressure plate	1
7	M6x12 DIN 933-8.8	Hex. bolt	2
8	M8x45 DIN 933-8.8	Hex. bolt	1
9	0320.71	Safety nut	1
10	13 DIN 125	Washer	2
11	4x20 DIN 1481	Expanding pin	1
		Electrical-Control	
12	1701.30.09.01	Angle	1
13	1701.30.09.04	Beam	1
14	M6x12 DIN 933-8.8	Hex. bolt	1
15	R6,6 DIN 440	Washer	1
16	1701.46.03.42	Clamp	1
17	A6 DIN 72586	Connector	1
18	M4x20 DIN 84-48	Cheese head bolt	2
	M4 DIN 934-8	Hex. nut	2
	A4 DIN 127	Spring washer	2
19	M6 DIN 985-8	Safety nut	2

Key No.	Part-Number	Description	pc.
20	R 6,6 DIN 440	Washer	2
21	0340.25	Spring	1
22	M6 DIN 315	Wing nut	1
23	1701.30.09.25	End switch	1
24	1701.30.09.26	End switch	2
25	M3x16 DIN 84-48	Cheese head bolt	6
	M3 DIN 934-8	Hex. nut	6
26*	3,2 DIN 125	Washer for No. 25	6
27	1120.24.01.31	Cable clamp	2
28	1701.30.09.33	Angle	1
29	0346.23	Spring clip	1
30	M5x12 DIN 84-48	Cheese head bolt	2
	M5 DIN 934-8	Hex. nut	2
	A5 DIN 127	Spring washer	2
31	1701.30.09.40	Base	1
32*	1701.30.09.41	Connector for No. 31	8
33*	M4x10 DIN 84-48	Cheese head bolt for No. 31	2
	M4 DIN 439-04	Hex. nut	2
	A4 DIN 127	Spring washer	2
		Control Unit	
34	1701.30.10.01	Control unit	1
35*	10 AT ähnlich DIN 41571	Fuses (in twine box)	5
36	M4x30 DIN 84	Cheese head bolt	2

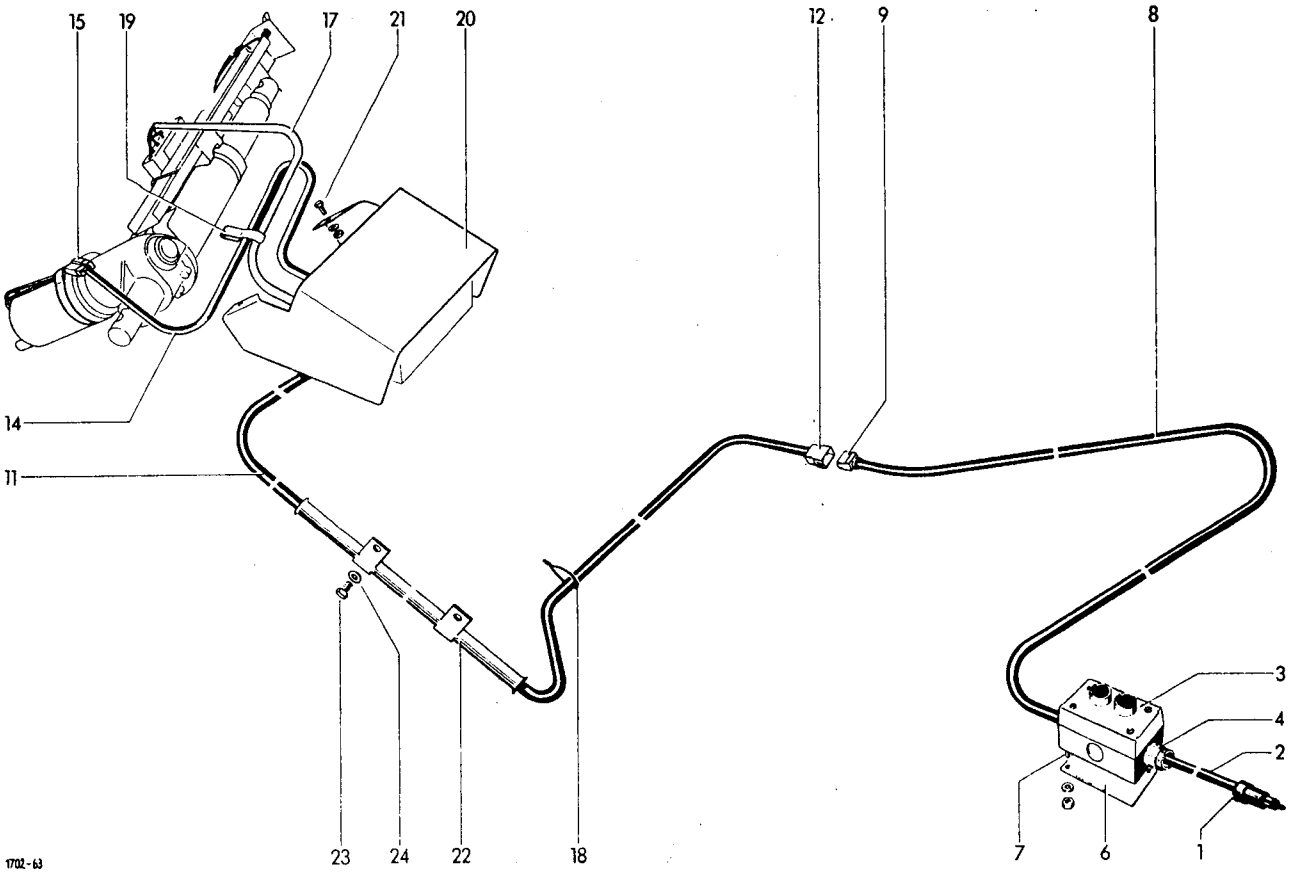

Key No.	Part-Number	Description	pc.
		Automatic Tying Unit (Special Equipment)	
		Wiring	
1-8	1701.30.11.01	Starter cable cpl.	1
1	3151.09.02.03	Universal coupling	1
2	NYMHY 2x2,5 mm² lg. 1500	Cable	1
3-7	1701.30.11.41	Push button switch cpl.	1
3	1701.30.11.42	Push button switch	1
3a	6405.22.01.08	Holder for No. 3	1
3b	M 8x16 DIN 933-8.8	Hex. bolt for No. 3a	2
	M 8 DIN 934-8	Hex. nut	2
	A 8 DIN 127	Spring washer	2
4	PG 13,5 Form A DIN 46320	Screw type conduit fitting	2
5*	PG 13.5	Lock nut for No. 4	2
6	1701.30.11.47	Plate	1
7	M 4x20 DIN 84-4.8	Socket head cop screw	2
	M 4 DIN 934-8	Hex. nut	2
	A 4 DIN 127	Spring washer	2
8	NYMHY-3 3x2,5 lg. 4500	Cable	1
9	1701.30.11.17	Adapter socket	1
10*	3151.09.03.04	Adapter plug for No. 8	3

Key No.	Part-Number	Description	pc.
11	1701.30.11.20	Cable cpl.with No.12+13	1
12	1701.30.11.22	Socket housing	1
13*	3151.30.11.22	Plus for No. 11	3
14	1701.30.11.25	Cable cpl.with No.15+16	1
15	3151.09.03.03	Socket housing	1
16*	3151.09.03.04	Plug for No. 12	2
17	1701.30.11.57	Control cable	1
18	1120.24.01.31	Cable clamp	10
19	12x40	Chassis clamp	2
		Guards	
20	1702.30.12.01	Cover	1
21	M 6x12 DIN 933-8.8	Hex. bolt	2
	M 6 DIN 934-8	Hex. nut	2
	A 6 DIN 127	Spring washer	2
		Wiring	
22	1701.30.13.01	Tube	1
23	0320.77	Swageform bolt	2
24	R 6,6 DIN	Washer	2

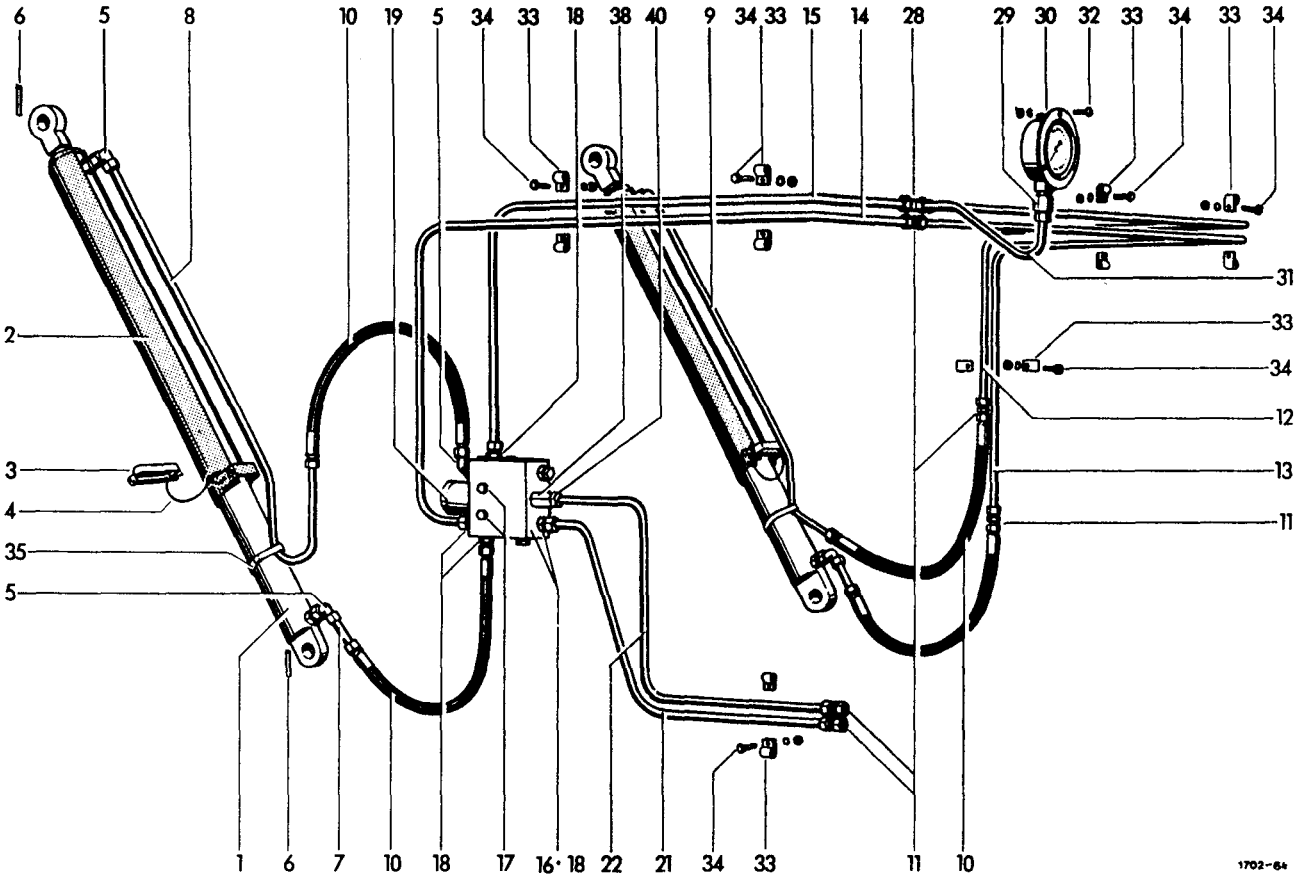

Key No.	Part-Number	Description	pc.
		Hydraulic System Cylinder with Tailgate Support	
1	1701.46.01.01	Hydraulic cylinder	2
1a*	24605,0	Set of seals for No.1	2
2	1702.46.01.04	Support	2
3	1702.46.01.08	Spring clip	2
4	5015.01.01.08	Safety rope	2
		Valve Block Gauge and Tubing	
5	1701.46.03.02	Adjustable angle Connection	5
6	6x50 DIN 1481	Expanding pin	4
7	1701.46.02.29	Tubing	2
8	1702.46.02.05	Tubing	1
9	1702.46.02.06	Tubing	1
10	6407.43.04.03	High pressure hose	4
11	EL 12 DIN 2353	Straight connection	7
12	1702.46.02.09	Tubing	1
13	1702.46.02.10	Tubing	1
14	1702.46.02.11	Tubing	1
15	1702.46.02.12	Tubing	1
16	1701.46.03.14	Valve block	1
17	M10x80 DIN 931-8.8	Hex. bolt	2
	A10 DIN 127	Spring washer	2
18	CS 12 DIN 2353	Straight connection	5
19	1701.46.03.18	Accumulator	1
20*	A14x18 DIN 7603	Seal for No. 19	1

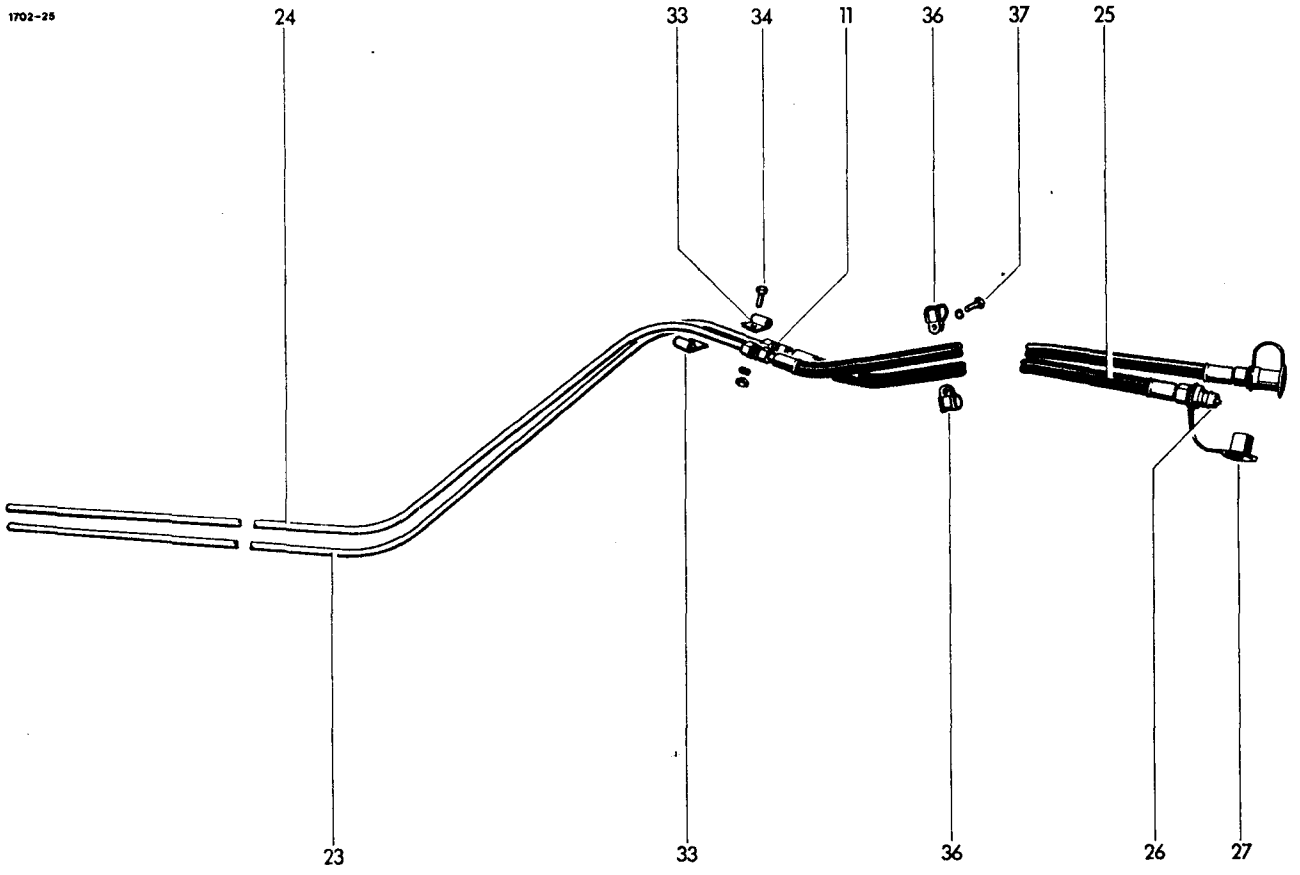

Key No.	Part-Number	Description	pc.
21	1702.46.02.21	Tubing	1
22	1702.46.02.22	Tubing	1
23	1702.46.02.23	Tubing	1
24	1702.46.02.24	Tubing	1
25	6407.43.03.37	High pressure hose	2
26	3121.01.04.16	Coupling plug	2
27	3121.01.04.17	Dust cover	2
28	QL12 DIN 2353	T-connection	1
29	1701.46.03.33	Pressure gauge connection	1
30	1702.46.02.30	Pressure gauge	1
31	1702.46.02.31	Tubing	1
32	M4x10 DIN 84-48	Cheese head bolt	3
	M4 DIN 934-8	Hex. nut	3
	A4 DIN 127	Spring washer	3

Key No.	Part-Number	Description	pc.
33	1701.46.03.38	Clamp	14
34	M6x16 DIN 933-8.8	Hex. bolt	7
	M6 DIN 934-8	Hex. nut	7
	A6 DIN 127	Spring washer	7
35	1701.46.03.42	Clamp	2
36	RSGU 1100 20/15	Norma-Clamp	2
37	M6x25 DIN 933-8.8	Hex. bolt	1
	A 6 DIN 127	Spring washer	1
38	1705.46.02.46	Filter housing	1
39*	1705.46.02.47	Filter for No. 38	1
40	AS 12 DIN 3870	Cap scraw	1
41*	S 12 DIN 3861	Cutting ring for No. 40	1

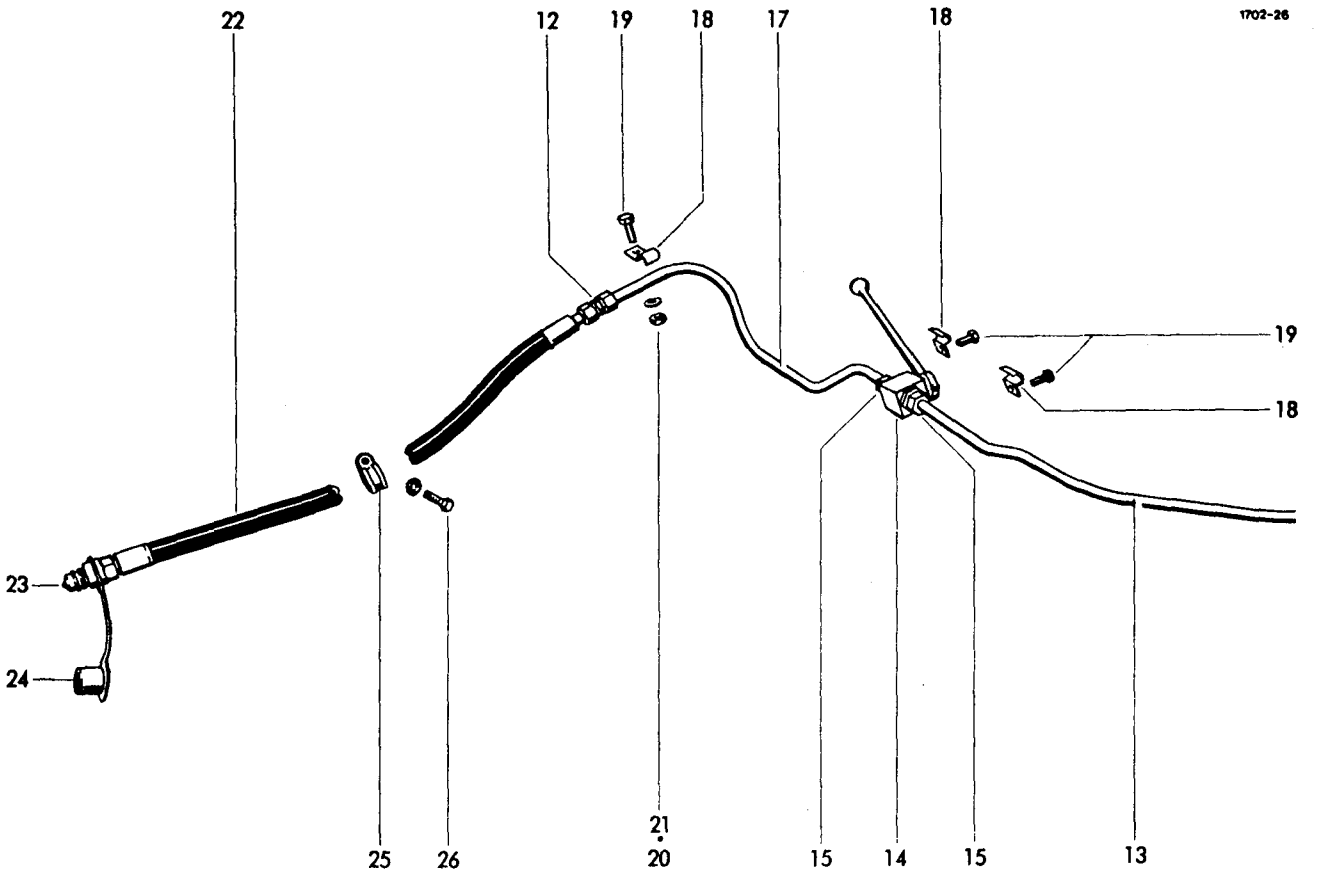

Key No.	Part-Number	Description	pc.
		Hydraulic System Cylinder for Pick-up	
1	1705.46.03.01	Hydraulic cylinder	1
		Valve Block and Tubing for Pick-up	
2	1705.46.04.02	Valve block	1
3	17 DIN 1441	Washer	1
4	4x25 DIN 94	Split pin	1
5	1705.46.04.03	Accumulator	1
6*	118x22 DIN 7603	Seal for No. 5	1
7	CL-12 DIN 2353	Straight connection	2
8	M8x75 DIN 931-8.8	Hex. bolt	2
	M8 DIN 934-8	Hex. nut	2
	A8 DIN 127	Spring washer	2
9	EGES 12 LM-WD	Straight connection	1
10	5630.13.01.05	High pressure hose	1

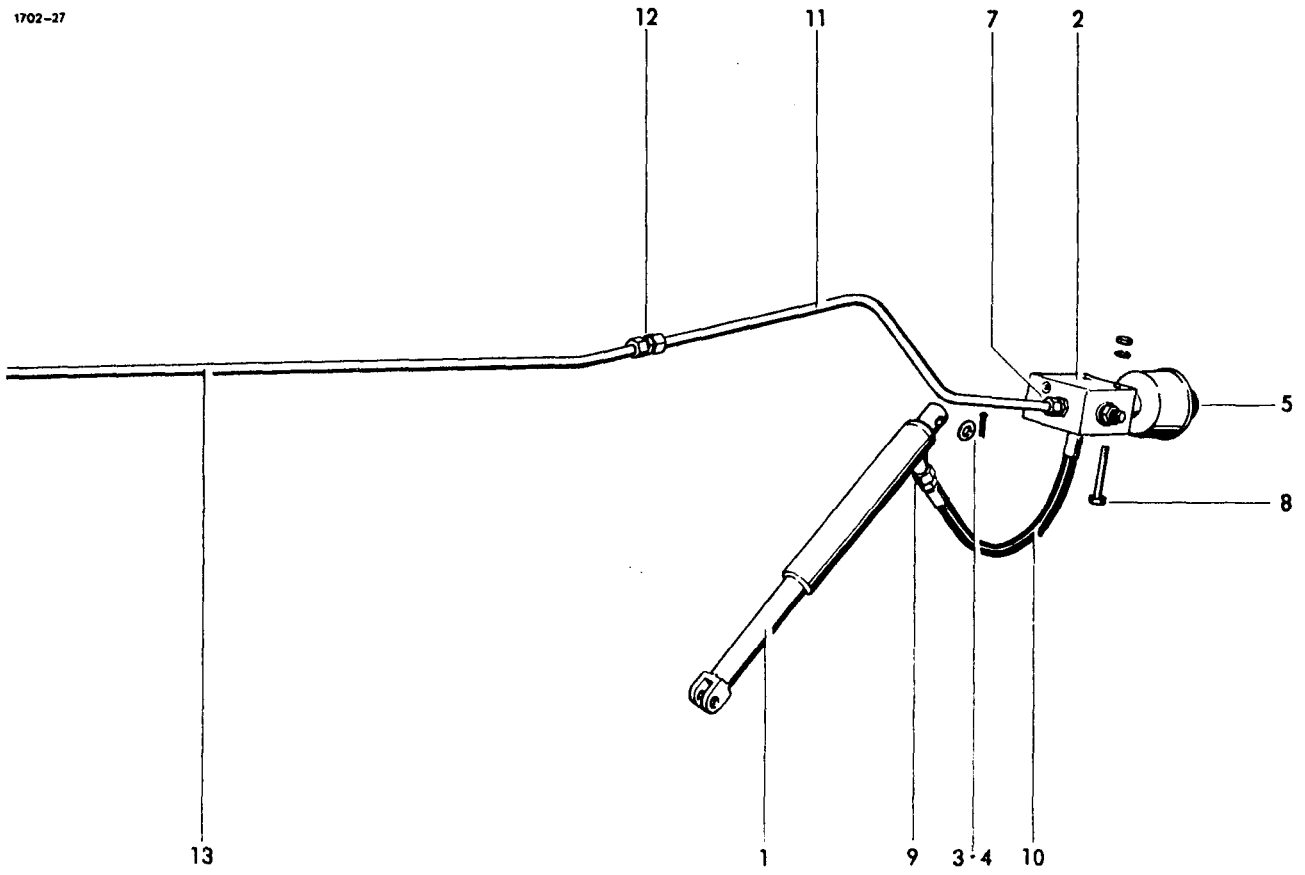

Key No.	Part-Number	Description	pc.	Key No.	Part-Number	Description	pc.
11	1702.46.04.12	Tubing	1	20	M6 DIN 934-8	Hex. nut	1
12	EL 12 DIN 2353	Straight connection	2	21	A6 DIN 127	Spring washer	1
13	1702.46.04.14	Tubing	1	22	6407.43.03.37	High pressure hose	1
14	1705.46.04.20	Block valve	1	26	3121.01.04.16	Coupling plug	1
15	AL 12 DIN 3870	Box nut	2	24	3121.01.04.17	Dust cover	1
16*	L12 DIN 3861	Seal for No. 15	2	25	RSGU 1000 20/15	Norma-clamp	1
17	1702.46.04.18	Tubing	1	26	M6x20 DIN 933-8.8	Hex. bolt	1
18	1701.46.03.38	Clamp	3		A6 DIN 127	Spring washer	1
19	M6x16 DIN 933-8.8	Hex. bolt	3				

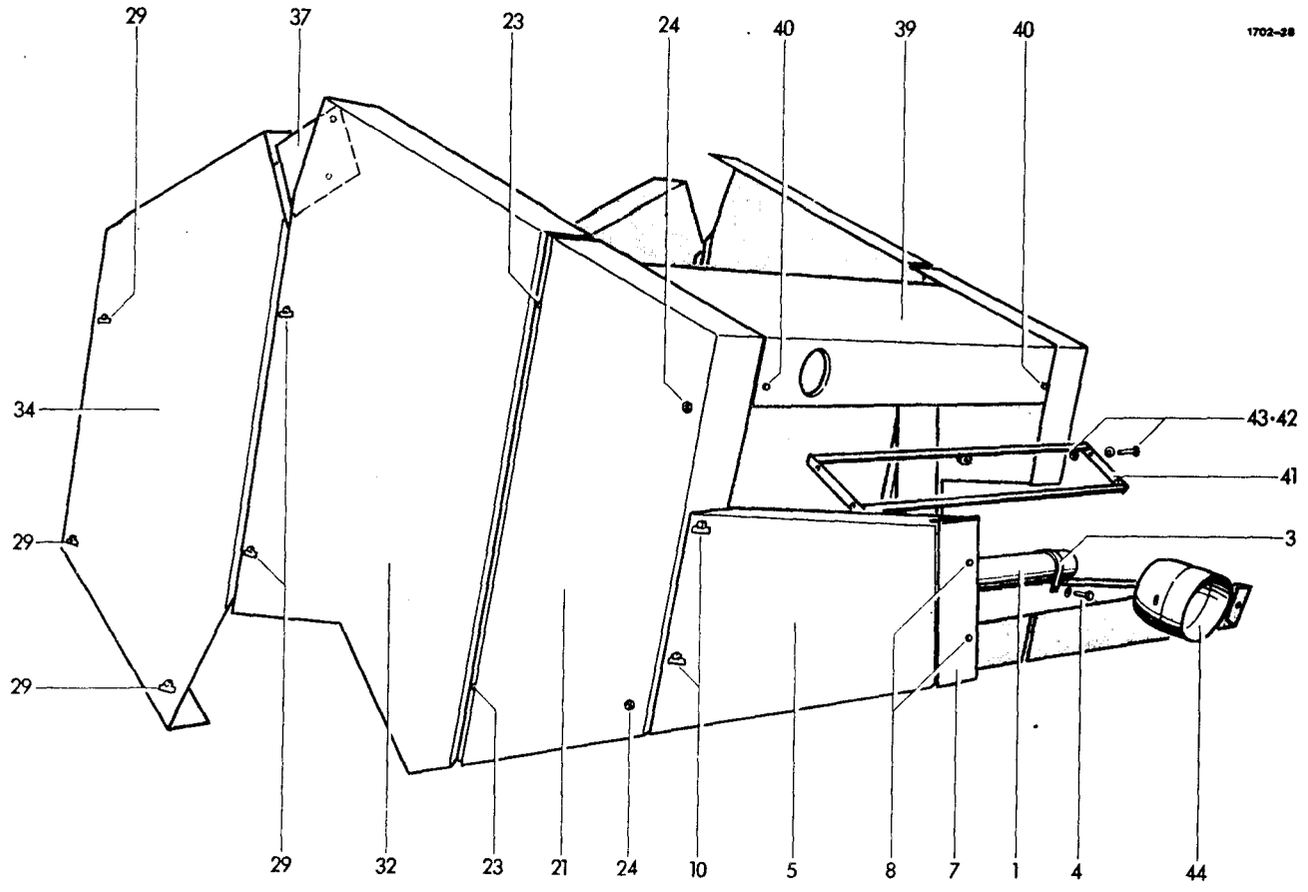

Key No.	Part-Number	Description	pc.
		Guards	
1	1702.51.01.01	Guard tube	1
2	6117.61.05.18	Clamping strip for No. 1	2
3	1702.51.01.03	Clamp	2
4	M8x20 DIN 933-8.8	Hex. bolt	4
	M8 DIN 934-8	Hex. nut	4
	8.4 DIN 125	Washer	4
	A8 DIN 127	Spring washer	4
5	1702.51.02.01	Chain guard	1
6	1702.51.02.06	Inner chain goard	1
7	1702.51.02.07	Front plate	1
8	M8x20 DIN 933-8.8	Hex. bolt	2
	M8 DIN 934-8	Hex. nut	2
	8.4 DIN 125	Washer	2
	A8 DIN 127	Spring washer	2
9	M8x16 DIN 933-8.8	Hex. bolt	4
	M8 DIN 934-8	Hex. nut	4
	A8 DIN 127	Spring washer	4
10	1705.51.08.10	Winged head, hinged	2

Key No.	Part-Number	Description	pc.
11*	1307.51.08.25	Holding washer for No. 10	2
12	1702.51.03.01	Front cover left	1
13	1702.51.03.02	Front shield left	1
14	1702.51.03.03	Corner shield	1
15	1702.51.03.04	Shield	1
16	M8x10 DIN 933-8.8	Hex. bolt	2
	8.4 DIN 125	Washer	2
17	M8x16 DIN 933-8.8	Hex. bolt	5
	M8 DIN 934-8	Hex. nut	5
	8.4 DIN 125	Washer	5
	A8 DIN 127	Spring washer	5
18	M8x16 DIN 933-8.8	Hex. bolt	1
	M8 DIN 934-8	Hex. nut	1
	A8 DIN 127	Spring washer	1
19	M6x16 DIN 933-8.8	Hex. bolt	3
	M6 DIN 934-8	Hex. nut	3
	6.4 DIN 125	Washer	3

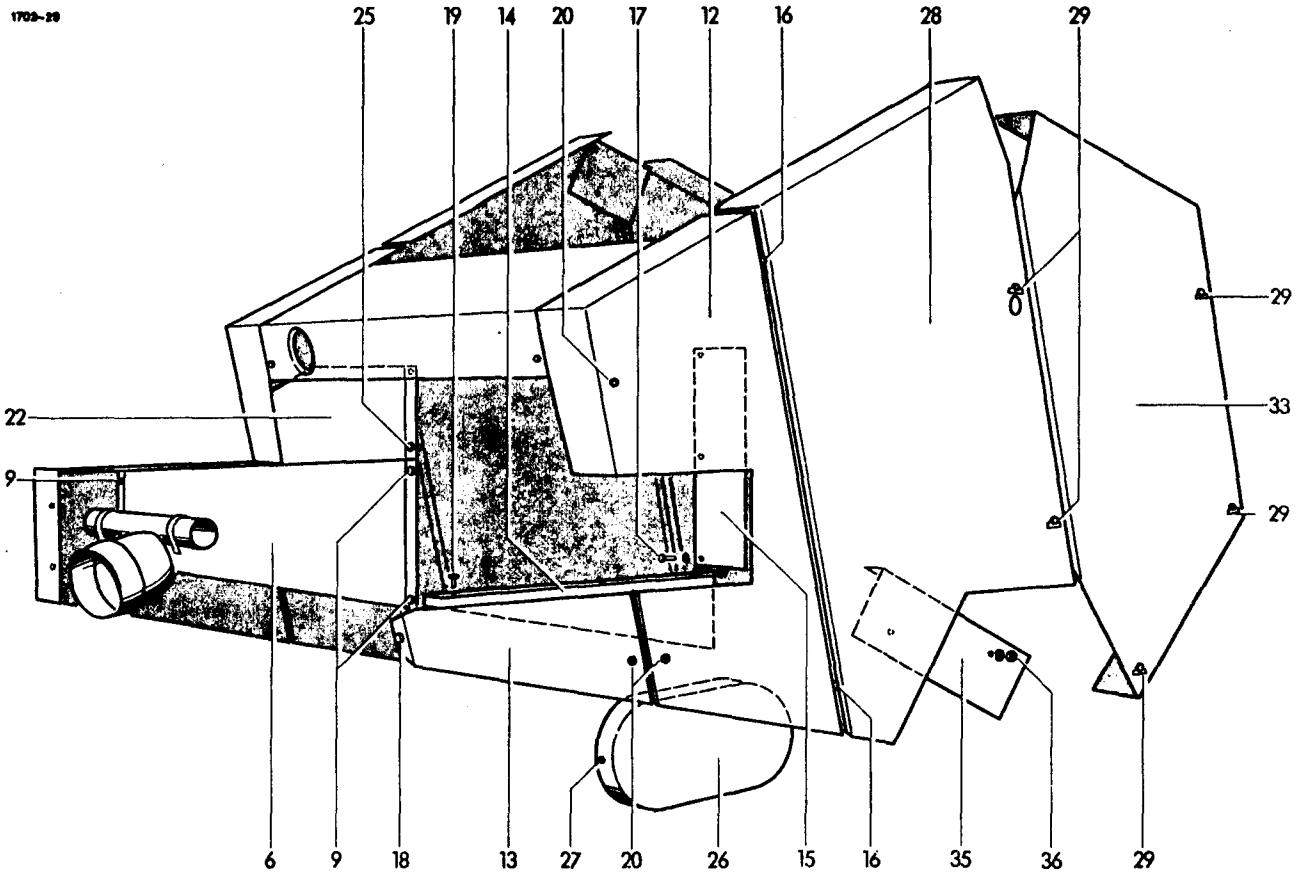

Key No.	Part-Number	Description	pc.
20	M12 DIN 934-8	Hex. nut	3
	13 DIN 125	Washer	3
21	1702.51.04.01	Front cover right	1
22	1702.51.04.05	Inside cover right	1
23	M8x10 DIN 933-8.8	Hex. bolt	2
	8.4 DIN 125	Washer	2
24	M12 DIN 934-8	Hex. nut	2
	13 DIN 125	Washer	2
25	M8x16 DIN 933-8.8	Hex. bolt	3
	M8 DIN 934-8	Hex. nut	3
	A8 DIN 127	Spring washer	3
26	1702.51.05.01	Pick-up drive cover	1
27	M8x16 DIN 933-8.8	Hex. bolt	3
	R9 DIN 440	Washer	3
28	1702.51.06.01	Hinged front cover left	1
29	1705.51.08.10	Winged head, hinged	10
30*	1307.51.08.25	Holding washer	
31*	5108.35.05.04	PVC-Steel rope for No. 28,32,33,34	4

Key No.	Part-Number	Description	pc.
32	1702.51.07.01	Hinged front cover right	1
33	1702.51.08.01	Tail gate cover left	1
34	1702.51.09.01	Tail gate cover right	1
35	1702.51.10.01	Chain cover	1
36	M12 DIN 934-8	Hex. nut	2
	13 DIN 125	Washer	2
37	1702.51.11.01	Hinged roller shield	1
38*	M10x16 DIN 933-8.8	Hex. bolt for No. 37	2
	A10 DIN 127	Spring washer	2
39	1702.51.12.01	Top cover	1
40	M8x12 DIN 933-8.8	Hex. bolt	4
	8.4 DIN 125	Washer	4
41	1702.51.14.01	Grill	1
42	M6x45 DIN 931-8.8	Hex. bolt	4
	R6.6 DIN 440	Washer	4
43	NM6 DIN 980-8	Safety nut	4
44	1701.12.03.01	Pto cover	1

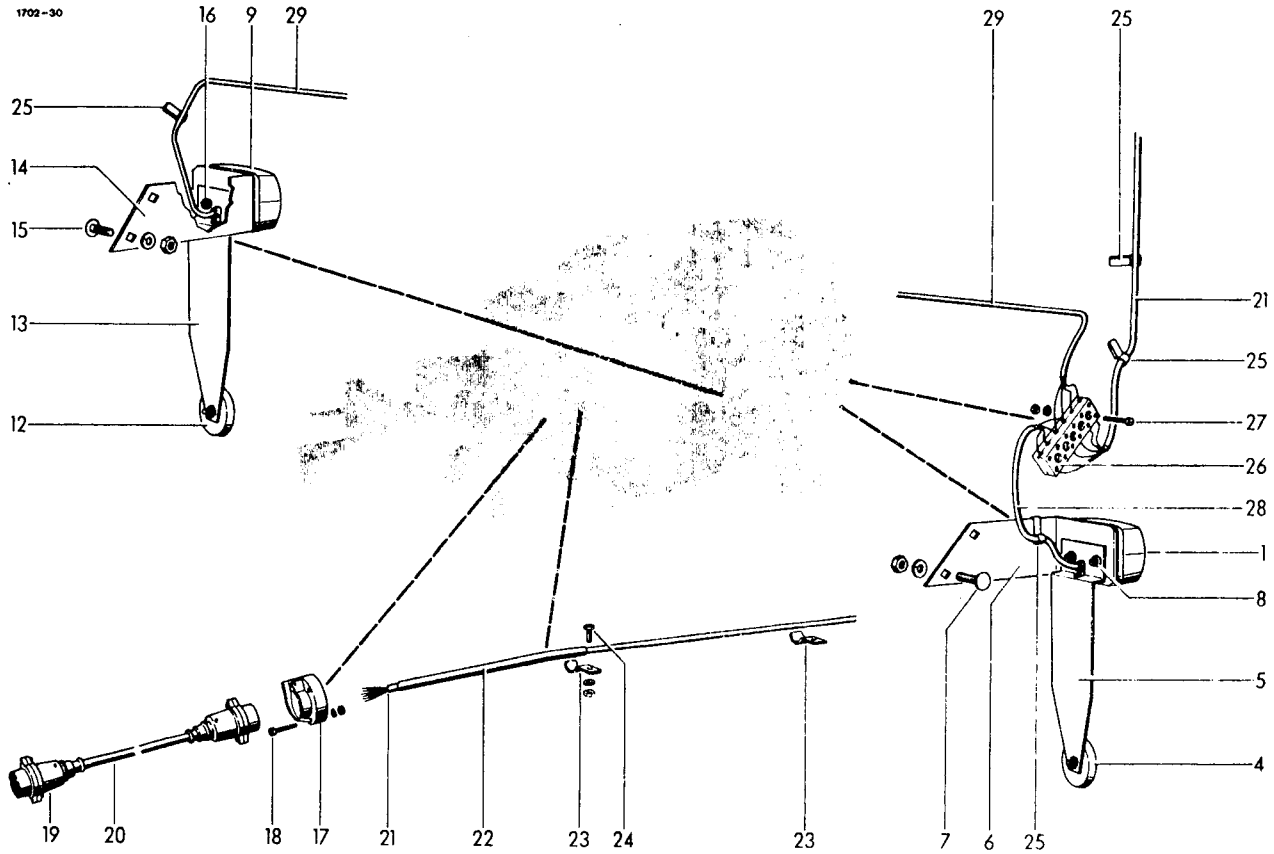

Key No.	Part-Number	Description	pc.
		Lighting System	
1-8	1701.63.01.00	Bracket Left	1
1	Typ BBSK 215	JOKON Tail light left	1
2*	RL 12V 21 W DIN 72601	Bolb for No. 1	2
3*	G12 V 10 W DIN 72601	Bolb for No. 1	1
4	Typ R 13 C	JOKON reflector	1
5	1121.63.01.07	Angle	1
6	1701.63.01.08	Holder	1
7	M10x20 DIN 603-8.8	Cup head bolt	2
	M10 DIN 934-8	Hex. nut	2
	A10 DIN 127	Spring washer	2
8	M5x16 DIN 84-4.8	Cheese head bolt	2
	M5 DIN 934-8	Hex. nut	2
	A5 DIN 127	Spring washer	2
9-16	1701.63.02.00	Bracket right	1
9	Typ BBS 215	JOKON Tail light right	1
10*	RL 12 V 21 W DIN 72601	Bolb for No. 9	2
11*	G 12 V 10 W DIN 72601	Bolb for No. 9	1
12	Typ R 13 C	JOKON reflector	1
13	1121.63.01.07	Angle	1
14	1701.63.02.08	Holder	1
15	M10x20 DIN 603-8.8	Cup head bolt	2
	M10 DIN 934-8	Hex. nut	2
	A10 DIN 127	Spring washer	2
16	M5x16 DIN 84-48	Cheese head bolt	2
	M5 DIN 934-8	Hex. nut	2
	A5 DIN 127	Spring washer	2

Key No.	Part-Number	Description	pc.
17+18	1121.63.04.00	Socket cpl.	1
18	M5x35 DIN 84-48	Cheese head bolt	3
	M5 DIN 934-8	Hex. nut	3
	A5 DIN 127	Spring washer	3
19+20	6117.35.04.01	Connecting cable cpl.	1
19	7B (7-core) DIN 72577	Plug	2
20	6x1 mm^2;		
	lg. 3000 NYMHY	Plastic cable	1
21	6x1 mm^2;		
	lg. 6350 NYMHY	Plastic cable	1
22	1702.03.05.02	Tube	1
23	0501 DB for AD 15	Clamp	4
24	0320.77	Swageform bolt	1
	A6 DIN 127	Spring washer	1
25	12x40	Chassis clamp	12
26	A6 DIN 72586	Cable connection terminal	1
27	M4x25 DIN 84-4.8	Cheese head bolt	2
	M4 DIN 934-8	Hex. nut	2
	A4 DIN 127	Spring washer	
28	4x1 mm^2;		
	lg. 330 NYMHY	Plastic cable	1
29	4x1 mm^2;		
	lg. 2200 NYMHY	Plastic cable	1

Part Number Index

Please notice: Small parts referred to DIN like lock washers, keys, nuts, grease nipples, bolts, washers, expanding pins, split pins e.t.c. are not listed.
Sequence, type and description of listed part numbers can be seen in the summary below:

0307.86	**– 0361.08**	WELGER Factory norm - parts
0703.15	**– 0765.26**	WELGER Factory norm - cast iron parts
1101.22.01.45	**– 6408.21.01.12**	WELGER Machinery - parts for different types

Part-No.	Page	Key No.
0307.86	D 20	4
0307.87	D 20	15
0307.96	D 20	15a
0307.97	D 20	4
0309.11	D 20	24
0309.23	G 20	6
	G 20	24
0309.24	G 10	13
0309.25	G 10	8
	G 20	6a
	G 20	23
	G 30	6
0313.20	H 50	3
0313.21	H 50	2
0318.18	D 20	30
0318.27	G 20	18
0320.30	F 10	10
	F 10	15
0320.31	F 10	11
	F 10	16
0320.71	H 50	9
0320.74	A 10	4
0320.77	C 30	2
	C 30	5
	H 60	23
	K 20	24
0320.81	F 10	5
0321.06	H 10	11
	H 40	12
	H 40	22
0323.27	C 20	25
0324.04	H 30	4
0326.27	H 20	10
0327.19	C 30	21
0328.33	F 10	6
0328.34	D 20	25
0328.43	G 10	7
	G 20	5
	G 20	22
	G 30	5
	G 30	19
0328.48	G 10	6a
	G 20	14
	G 20	30
	G 30	14
	G 30	26
0328.49	G 10	5a
0331.70	B 40	17
0338.30	C 20	10
0338.85	C 20	12
0340.04	H 40	18
0340.25	H 30	14
	H 50	21
0341.51	H 10	7
	H 40	7
0343.12	C 20	11
0343.48	C 20	13
0344.87	H 50	5
0346.23	H 50	29
0361.08	H 30	3
0703.15	C 10	2
0703.20	G 10	10
0709.17	C 10	10
0712.22	G 10	3
	G 20	2
	G 30	2
0712.23	G 30	16
0712.24	G 30	22
	G 40	2
0712.25	G 10	2
0761.02	H 30	12
0761.03	H 30	13
0765.26	C 20	16
1101.22.01.45	B 10	11
1101.22.01.49	B 10	13
1101.22.01.59	B 10	12
1101.22.14.00	H 30	12-17
1101.82.02.06	F 10	21
1105.14.04.21	E 10	8
1105.42.91.05	C 30	20
1109.23.04.14	H 40	19
1109.42.02.06	C 20	4
1110.41.02.05	C 10	14
1115.02.01.46	A 10	6
1115.02.01.48	A 10	8
1115.02.01.49	A 10	9
1115.02.01.50	A 10	10
1115.02.01.51	A 10	11
1115.02.01.55	A 10	15
1115.02.01.57	A 10	6-16
1115.02.01.59	A 10	7
1115.02.01.66	A 10	14
1115.02.03.05	A 10	17-19
1115.02.03.08	A 10	19
1115.41.02.01	C 10	7
1118.09.03.01	B 30	13
1120.24.01.31	H 50	27
	H 60	18
1121.02.95.01	F 10	24
1121.42.03.01	C 20	18
1121.63.01.07	K 20	5
	K 20	13
1121.63.04.00	K 20	17+18
1121.82.02.02	F 10	17
1307.51.08.25	H 30	11
	K 10	11
	K 11	30
1701.02.90.02	A 10	19-21
1701.03.02.55	B 10	19
1701.03.02.61	B 10	23
1701.03.02.69	B 10	21
1701.03.03.01	B 10	3
1701.03.04.01	B 10	5
1701.03.04.12	B 10	7
	B 10	24
1701.12.01.00	D 20	1-21
1701.12.01.01	D 20	1
1701.12.01.10	D 20	3
1701.12.01.21	D 20	13
1701.12.01.25	D 20	14
1701.12.03.01	K 11	44
1701.12.04.04	D 20	28
1701.23.04.01	F 10	4
1701.25.01.71	F 10	7
1701.25.01.72	F 10	8
1701.25.01.73	F 10	9
1701.25.01.81	F 10	12
1701.25.02.13	E 10	7
1701.25.02.14	E 10	9
1701.28.02.12	H 10	6
	H 40	6
1701.28.02.18	H 10	8
	H 40	8
1701.28.02.22	H 10	14
	H 40	26
1701.28.02.23	H 10	15
	H 40	25
1701.28.03.06	H 20	3
1701.28.03.10	H 20	5
1701.28.03.33	H 20	18
1701.28.03.35	H 20	19
1701.28.03.37	H 20	9
1701.28.05.08	H 20	20
1701.30.01.01	H 10	1
	H 40	1
1701.30.02.01	H 10	3
	H 40	3
1701.30.02.23	H 40	9
1701.30.02.28	H 40	10
1701.30.02.40	H 40	15
1701.30.02.41	H 40	16
1701.30.02.46	H 40	20
1701.30.08.01	H 50	1-7
1701.30.08.02	H 50	1
1701.30.08.07	H 50	6
1701.30.09.01	H 50	12
1701.30.09.04	H 50	13
1701.30.09.25	H 50	23
1701.30.09.26	H 50	24
1701.30.09.33	H 50	28
1701.30.09.40	H 50	31
1701.30.09.41	H 50	32
1701.30.10.01	H 50	34
1701.30.11.17	H 60	9
1701.30.11.20	H 60	11
1701.30.11.22	H 60	12
1701.30.11.25	H 60	14
1701.30.11.37	H 60	1-8
1701.30.11.41	H 60	3-7
1701.30.11.42	H 60	3
1701.30.11.47	H 60	6
1701.30.11.57	H 60	17
1701.30.13.01	H 60	22
1701.30.15.01	H 10	10
	H 40	21
1701.41.02.13	C 10	12
1701.41.03.12	C 10	17
1701.46.01.01	J 10	1
1701.46.02.29	J 10	7
1701.46.03.02	J 10	5
1701.46.03.14	J 10	16
1701.46.03.18	J 10	19
1701.46.03.33	J 11	29
1701.46.03.38	J 11	33
	J 21	18
1701.46.03.42	H 50	16
	J 11	35
1701.63.01.00	K 20	1-8
1701.63.01.08	K 20	6
1701.63.02.00	K 20	9-16

Part-No.	Page	Key No.
1701.63.02.08	K 20	14
1701.82.01.01	F 10	17-22
1701.82.01.16	F 10	23
1702.02.01.01	A 10	1
1702.03.01.02	B 10	1
1702.03.02.02	B 10	2
1702.03.07.08	B 10	14
1702.04.01.02	B 10	17
1702.04.02.02	B 10	18
1702.05.01.01	B 30	1
1702.05.02.01	B 20	5
	B 30	7
1702.05.03.01	B 20	7
	B 30	9
1702.05.03.15	B 20	8
	B 30	10
1702.08.01.01	B 20	1
1702.08.01.06	B 20	2
1702.12.02.01	D 10	1-38
1702.12.04.01	D 20	23
1702.12.04.05	D 20	27
1702.12.92.00	D 20	1-21
1702.12.92.26	D 20	15b
1702.14.01.05	G 10	1
1702.15.01.01	G 10	15
	G 40	8
1702.16.01.01	G 20	1
	G 30	1
1702.17.01.01	G 20	15
1702.19.01.01	G 30	15
1702.20.01.01	G 40	1
1702.23.01.01	F 10	1
1702.23.02.01	F 10	2
1702.23.03.01	F 10	3
1702.25.02.01	E 10	1
1702.25.02.08	E 10	5
1702.25.02.10	E 10	6
1702.28.04.01	H 30	1
1702.28.04.12	H 30	2
1702.28.04.16	H 30	6
1702.30.12.01	H 60	20
1702.41.01.01	C 10	1
1702.41.03.08	C 10	18
1702.42.01.01	C 20	1
1702.42.01.21	C 20	22
1702.42.02.01	C 20	2
1702.42.02.12	C 20	6-8
1702.42.02.13	C 20	6
1702.42.04.07	C 20	20
1702.42.05.01	C 30	1
1702.42.06.01	C 30	3
1702.42.06.04	C 30	4
1702.42.07.01	C 30	9
1702.42.07.13	C 30	10
1702.42.07.14	C 30	11
1702.42.08.02	C 20	23

Part-No.	Page	Key No.
1702.42.10.01	C 30	14
1702.42.92.01	C 30	19
1702.46.01.04	J 10	2
1702.46.01.08	J 10	3
1702.46.02.05	J 10	8
1702.46.02.06	J 10	9
1702.46.02.09	J 10	12
1702.46.02.10	J 10	13
1702.46.02.11	J 10	14
1702.46.02.12	J 10	15
1702.46.02.21	J 11	21
1702.46.02.22	J 11	22
1702.46.02.23	J 11	23
1702.46.02.24	J 11	24
1702.46.02.30	J 11	30
1702.46.02.31	J 11	31
1702.46.04.12	J 21	11
1702.46.04.14	J 21	13
1702.46.04.18	J 21	17
1702.51.01.01	K 10	1
1702.51.01.03	K 10	3
1702.51.02.01	K 10	5
1702.51.02.06	K 10	6
1702.51.02.07	K 10	7
1702.51.03.01	K 10	12
1702.51.03.02	K 10	13
1702.51.03.03	K 10	14
1702.51.03.04	K 10	15
1702.51.04.01	K 11	21
1702.51.04.05	K 11	22
1702.51.05.01	K 11	26
1702.51.06.01	K 11	28
1702.51.07.01	K 11	32
1702.51.08.01	K 11	33
1702.51.09.01	K 11	34
1702.51.10.01	K 11	35
1702.51.11.01	K 11	37
1702.51.12.01	K 11	39
1702.51.14.01	K 11	41
1702.63.05.02	K 20	22
1702.82.02.11	F 10	26
1702.82.02.12	F 10	27
1705.05.02.23	B 30	4
1705.05.02.24	B 30	5
1705.06.01.01	B 40	1-16
1705.06.01.04	B 40	7
1705.06.01.05	B 40	9
1705.06.01.14	B 40	16
1705.14.02.10	G 10	9
	G 20	7
	G 30	7
1705.15.02.01	G 10	16
	G 20	10
	G 30	10
	G 40	9
1705.15.02.03	G 10	18

Part-No.	Page	Key No.
1705.15.02.03	G 40	4
1705.17.02.01	G 20	16
1705.17.02.11	G 20	21
1705.17.02.19	G 20	25
1705.19.02.13	G 30	20
1705.25.01.32	F 10	13
1705.25.01.33	F 10	14
1705.25.06.01	E 10	10
1705.25.08.01	A 10	5
1705.25.09.02	E 10	3
1705.25.09.03	E 10	2
1705.28.02.38	H 20	1
1705.28.02.41	H 20	4
1705.41.03.02	C 10	16
1705.42.08.01	B 20	15
1705.42.91.07	C 30	15
1705.46.02.46	J 11	38
1705.46.02.47	J 11	39
1705.46.03.01	J 20	1
1705.46.04.02	J 20	2
1705.46.04.03	J 20	5
1705.46.04.20	J 21	14
1705.51.08.10	H 30	10
	K 10	10
	K 11	29
2101.42.13.01	C 20	3
2105.42.03.52	C 20	7
2106.21.01.03	C 10	13
3121.01.04.16	J 11	26
	J 21	23
3121.01.04.17	J 11	27
	J 21	24
3151.09.02.03	H 60	1
3151.09.03.03	H 60	15
3151.09.03.04	H 60	10
	H 60	16
3151.09.05.04	H 60	13
3203.01.12.37	B 40	3
5015.01.01.08	J 10	4
5108.35.05.04	K 11	31
5630.13.01.05	J 20	10
6117.35.04.01	K 20	19+20
6117.61.05.18	K 10	2
6404.21.01.13	B 20	12
6405.03.01.02	B 40	1
6405.03.01.06	B 40	5
6405.03.01.07	B 40	4
6405.03.01.08	B 40	10
6405.03.01.09	B 40	12
6405.22.01.08	H 60	3a
6407.43.03.37	J 11	25
	J 21	22
6407.43.04.03	J 10	10
6408.03.01.11	B 40	14
6408.03.01.12	B 40	15
6408.21.01.12	B 20	11